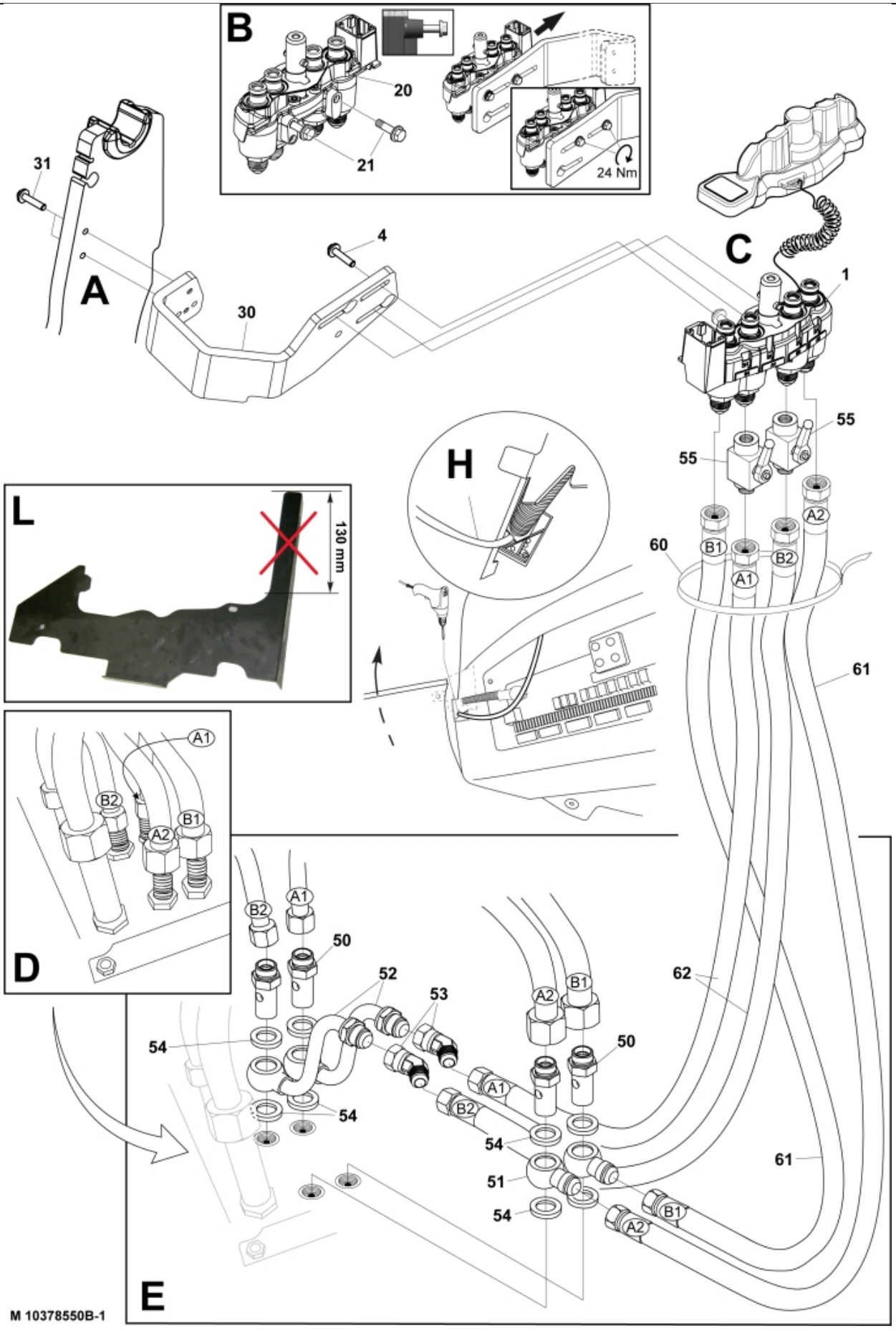
B
20
21
24 Nm
31
4
A
30
C
1
55
55
H
L
130 mm
60
B1
A1
B2
A2
61
A1
B2
B1
A2
D
B2
A1
50
52
53
A2
B1
62
54
50
A1
B2
54
54
61
51
54
B1
A2
E
M 10378550B-1

© 2025 Jost

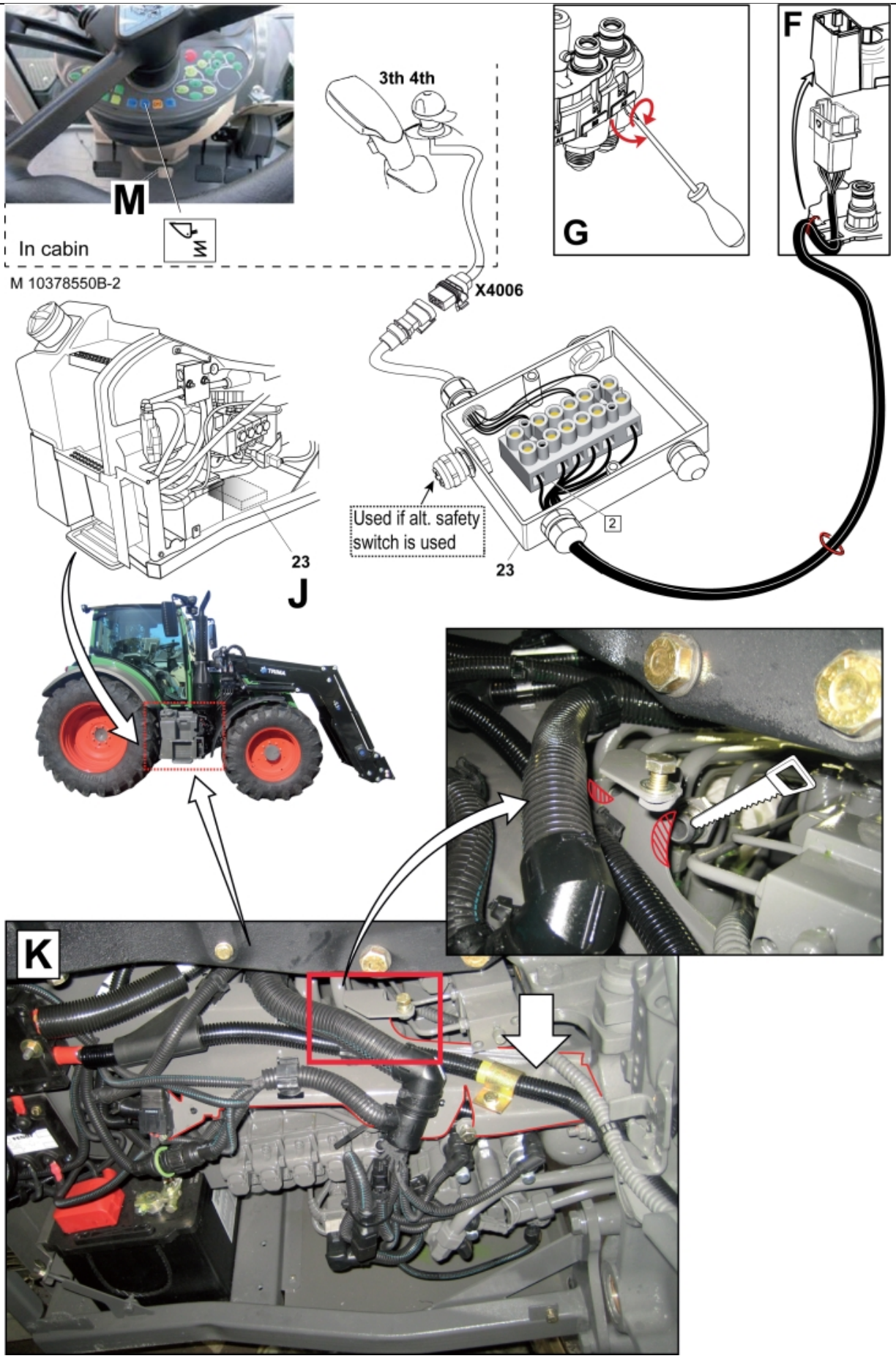
M
In cabin
M
3th 4th
G
F
M 10378550B-2
X4006
Used if alt. safety switch is used
2
23
23
J
K

© 2025 Jost

M 10378550B-3

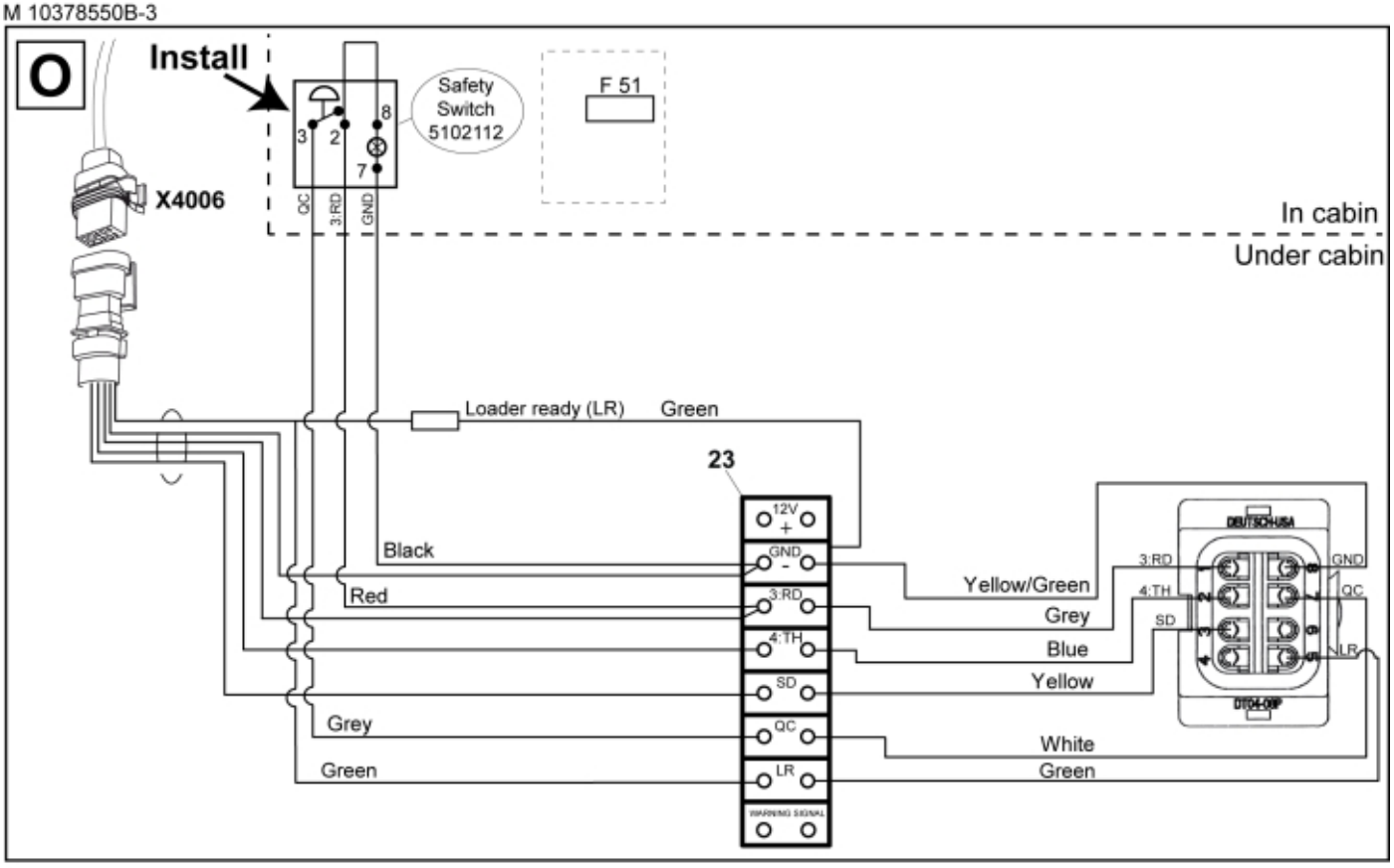

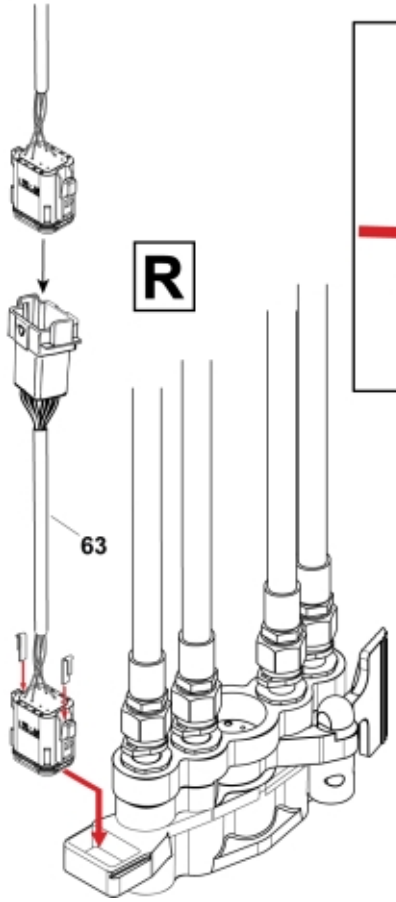

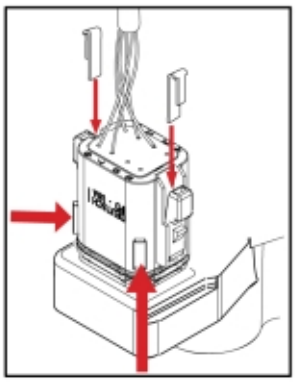

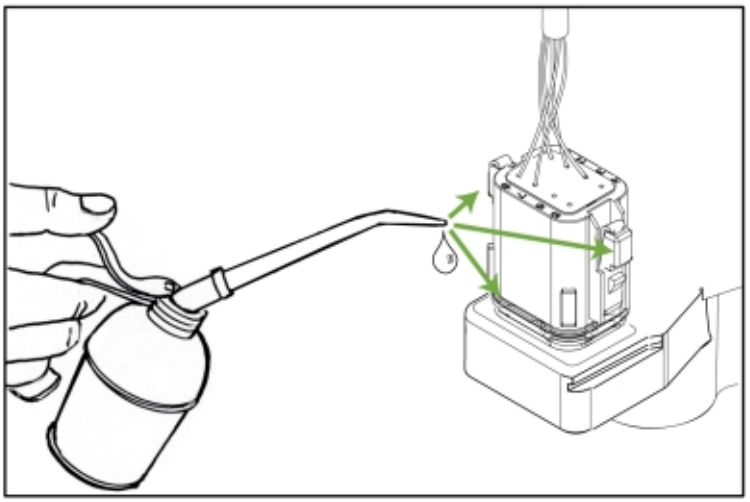

© 2025 Jost

Part assemblies Hose kit

PartNo	Pos	Qty	Name	Specifications
10378550B		1 PCS	Hose kit	
5033919		1	Multi coupling	
5044990	1	1	•• Base MC4 J. 7/8"	Replaces 5044952
11135173	2	1	•• Decal	
11134370	3	1	•• Decal	
5006018	4	2	•• Screw	M6SF M8X25
60032242	23	1 PCS	Harness	
5050852	24	1 PCS	Fuse holder	
5050853	25	1 PCS	Fuse holder	
10416028		1 PCS	Bracket complete	
10416018	30	1 PCS	•• Bracket	
5005999	31	2	•• Screw	M6SF M10X45
60028069	50	4 PCS	Hollow screw	
11120645	51	2	Banjo fitting	M22 7/8 UNF JIC
11120641	52	2 PCS	Banjo fitting	
5027823	53	2	Adaptor	7/8"UNF JIC - 7/8"UNF JIC 45°
5013614	54	12 PCS	Copper Washer	22,2 x 27,9 x 1,5
5033949	55	2	Shut-off valve	
5033606	60	6	Cable tie	7,5 x 385
9031662	61	2 PCS	Hose	7/8" JICx1050
9032330	62	2 PCS	Hose	7/8" JICx900
60011915	63	1	Wiring harness	

© 2025 Jost