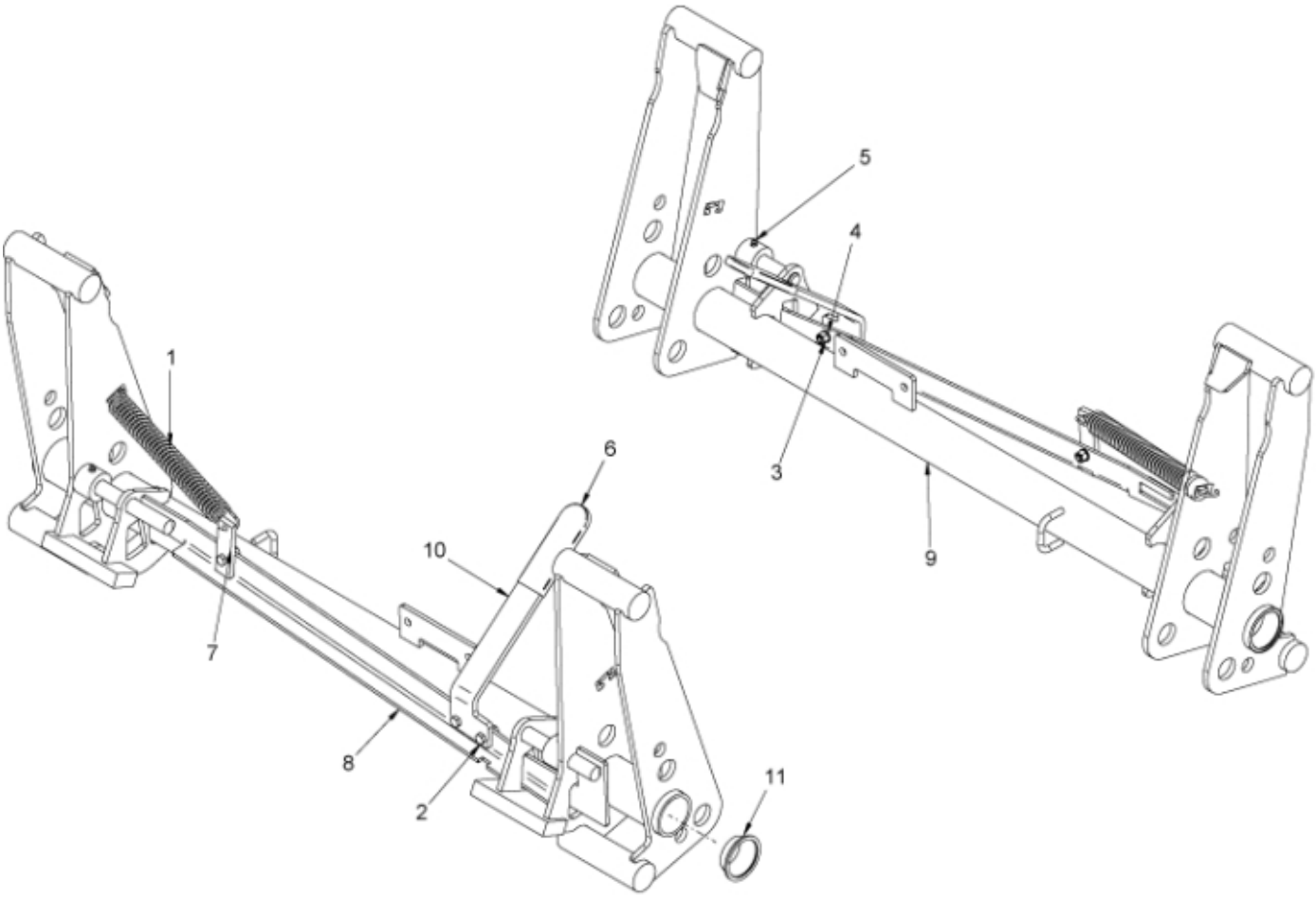

r5221748

© 2025 Jost

Description	Tool carrier
Part assemblies	Euro
Specification	Specification: Zetor Red

PartNo	Pos	Qty	Name	Specifications
5221748-25		1 PCS	Euro	Zetor Red
1101035	1	1	Spring	
5002052	2	3	Screw	M6S M8x25
5011553	3	3	Nut	M6M M8 Loc-king
5013101	4	3	Washer	BRB 8,4 x 16
5021901	5	2	Grease fitting	M6
5022144	6	1	Cover	
5221512-1	7	1 PCS	Bracket	Glossy Black
5221530-1	8	1	Locking plate	Glossy Black
5221758-25	9	1 PCS	Tool carrier	Zetor Red
5221874	10	1 PCS	Handle	
5221902	11	2 PCS	Plastic cover	

© 2025 Jost