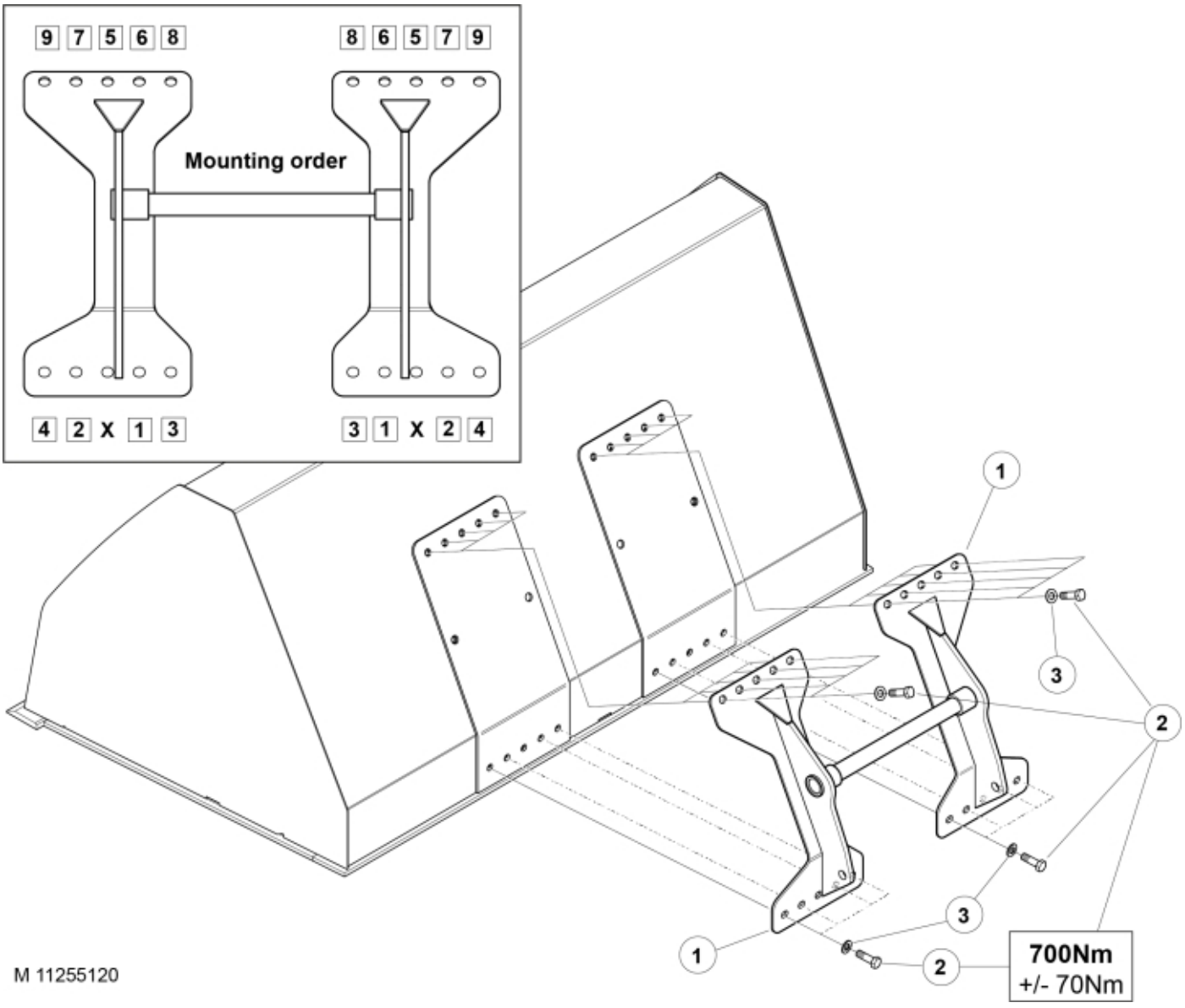

M 11255120

© 2025 Jost

Part assemblies Attachment kit Manitou MLT

PartNo	Pos	Qty	Name	Specifications
11255120		1	Attachment kit Manitou MLT	
60030132	1	1 PCS	Attachment Manitou MLT	
60029905		1	Screw kit	
5051392	2	20	• Screw	M6S 24X75 (8.8)
5051393	3	20	• Washer	M24 Broad Wedge-Lock

© 2025 Jost