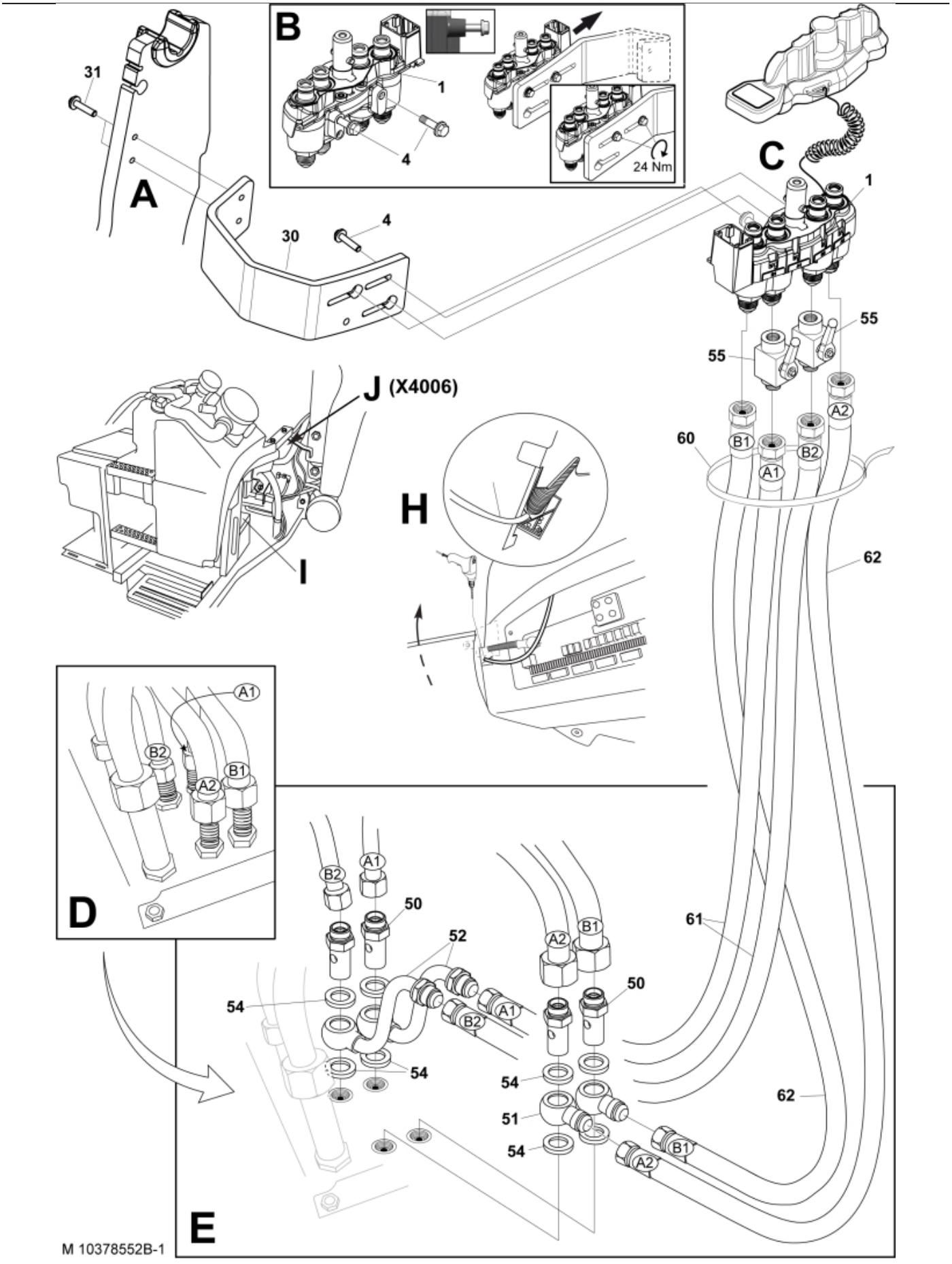
A
B
C
D
E
H
I
J (X4006)
31
30
4
1
24 Nm
55
60
62
61
50
52
54
51
A1
A2
B1
B2
M 10378552B-1

© 2025 Jost

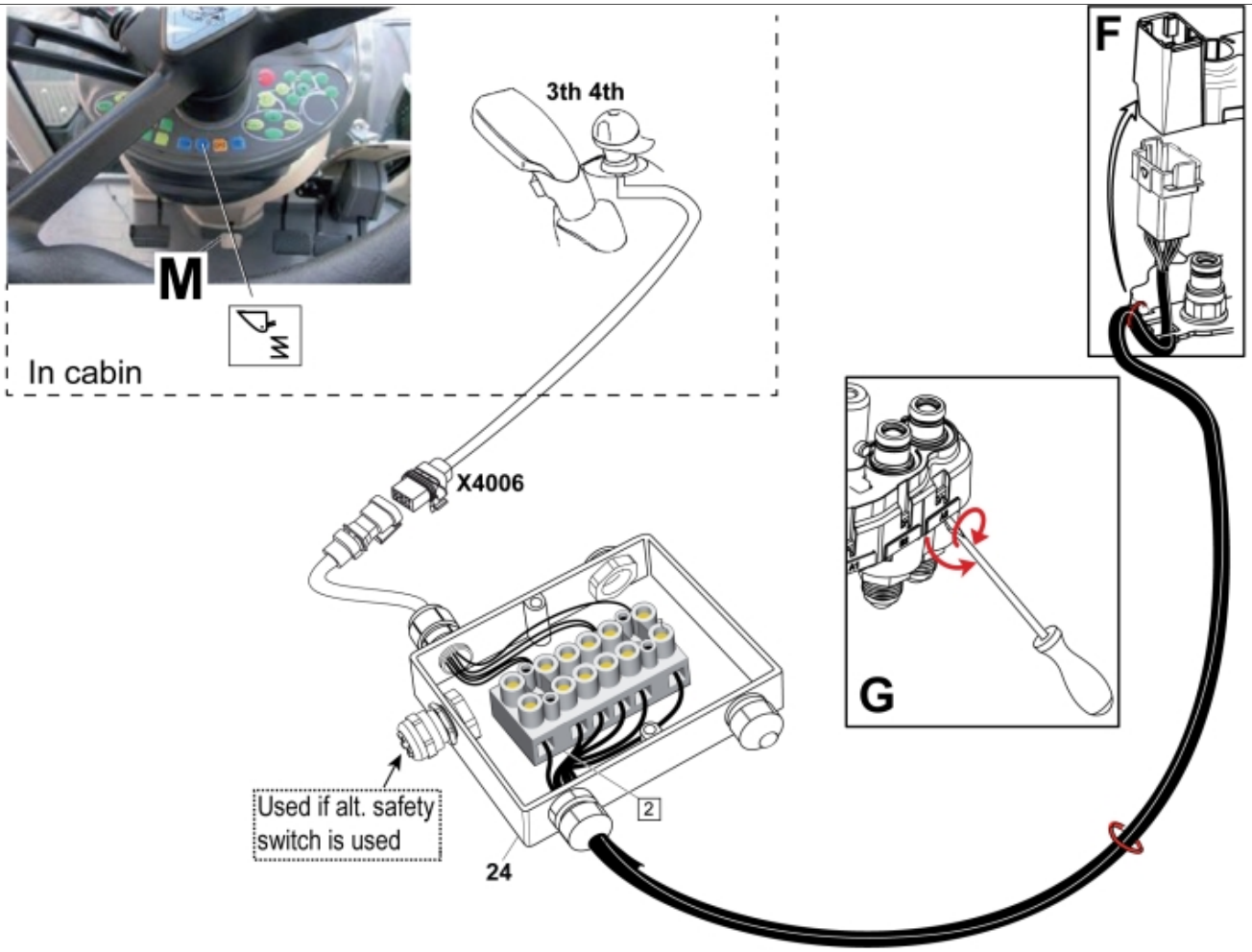

M 10378552B-2

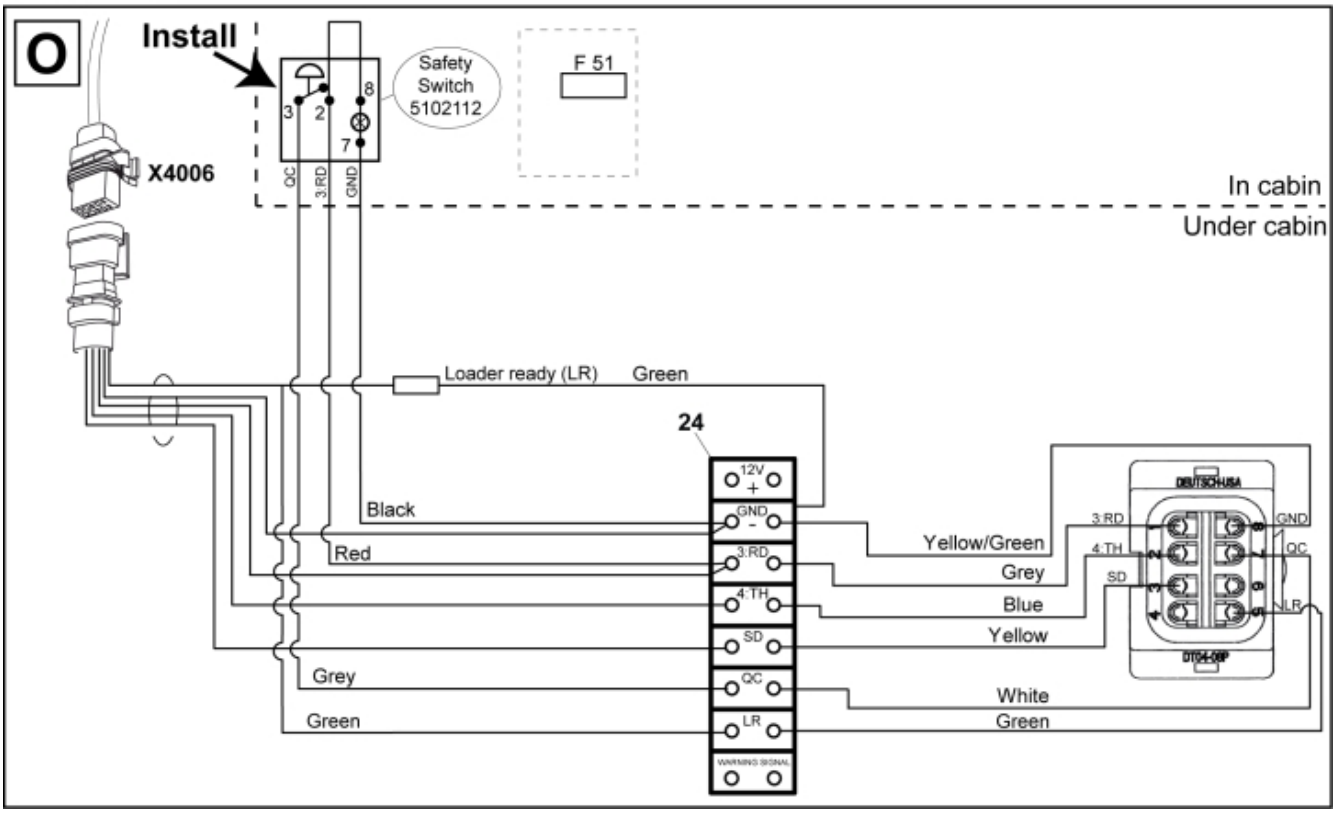

© 2025 Jost

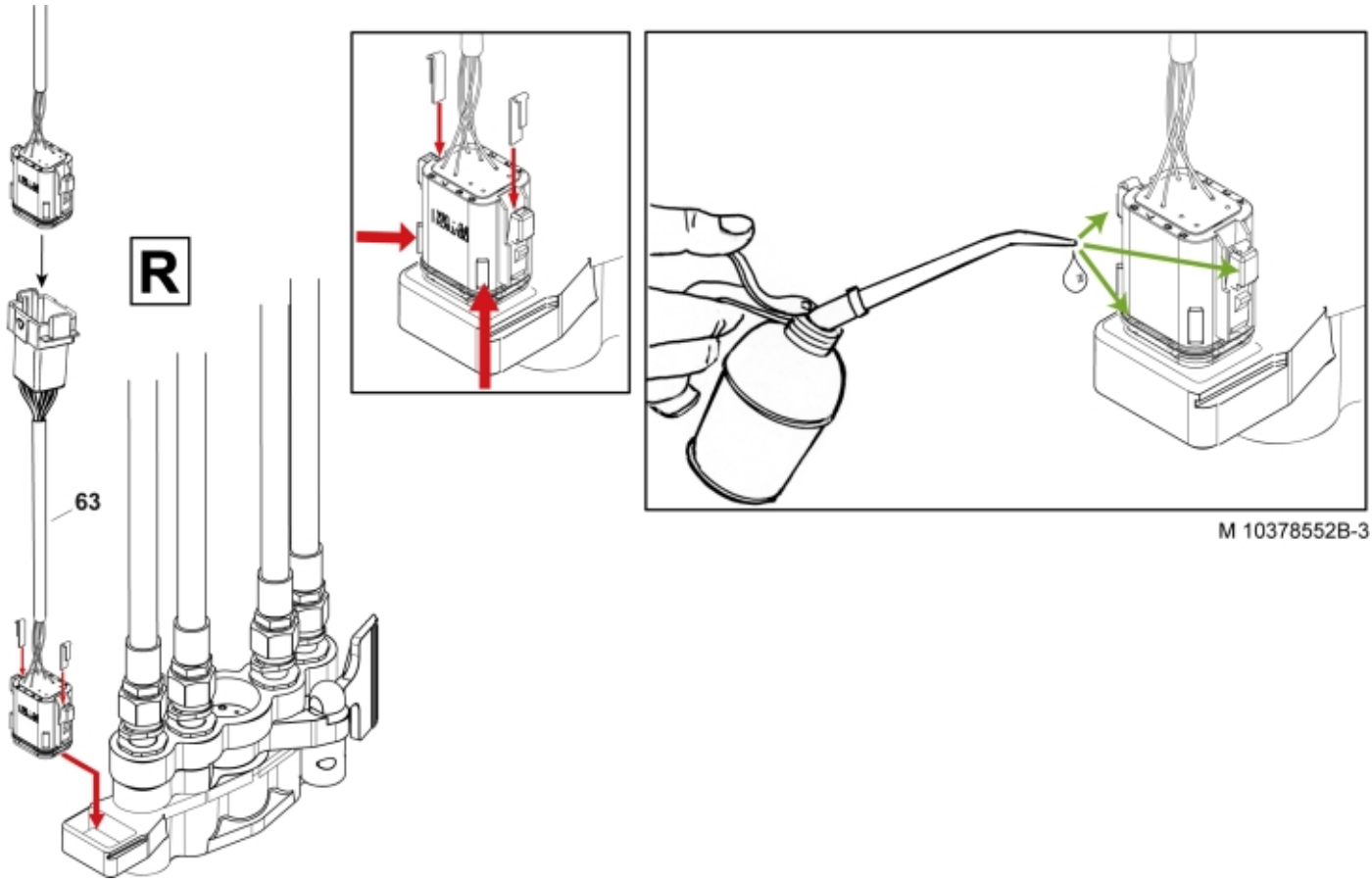

M 10378552B-3

© 2025 Jost

Part assemblies Hose kit

PartNo	Pos	Qty	Name	Specifications
10378552B		1 PCS	Hose kit	
5033919		1	Multi coupling	
5044990	1	1	•• Base MC4 J. 7/8"	Replaces 5044952
11135173	2	1	•• Decal	
11134370	3	1	•• Decal	
5006018	4	2	•• Screw	M6SF M8X25
60032242	24	1 PCS	Harness	
5050852	26	1 PCS	Fuse holder	
5050853	27	1 PCS	Fuse holder	
10391712	30	1	Valve bracket	
5005999	31	2	Screw	M6SF M10X45
60028069	50	4 PCS	Hollow screw	
11120645	51	2	Banjo fitting	M22 7/8 UNF JIC
11120641	52	2 PCS	Banjo fitting	
5013614	54	8 PCS	Copper Washer	22,2 x 27,9 x 1,5
5033949	55	2	Shut-off valve	
5033606	60	6	Cable tie	7,5 x 385
9031662	61	2 PCS	Hose	7/8" JICx1050
9031663	62	2 PCS	Hose	7/8" JICx1250
60011915	63	1	Wiring harness	

© 2025 Jost