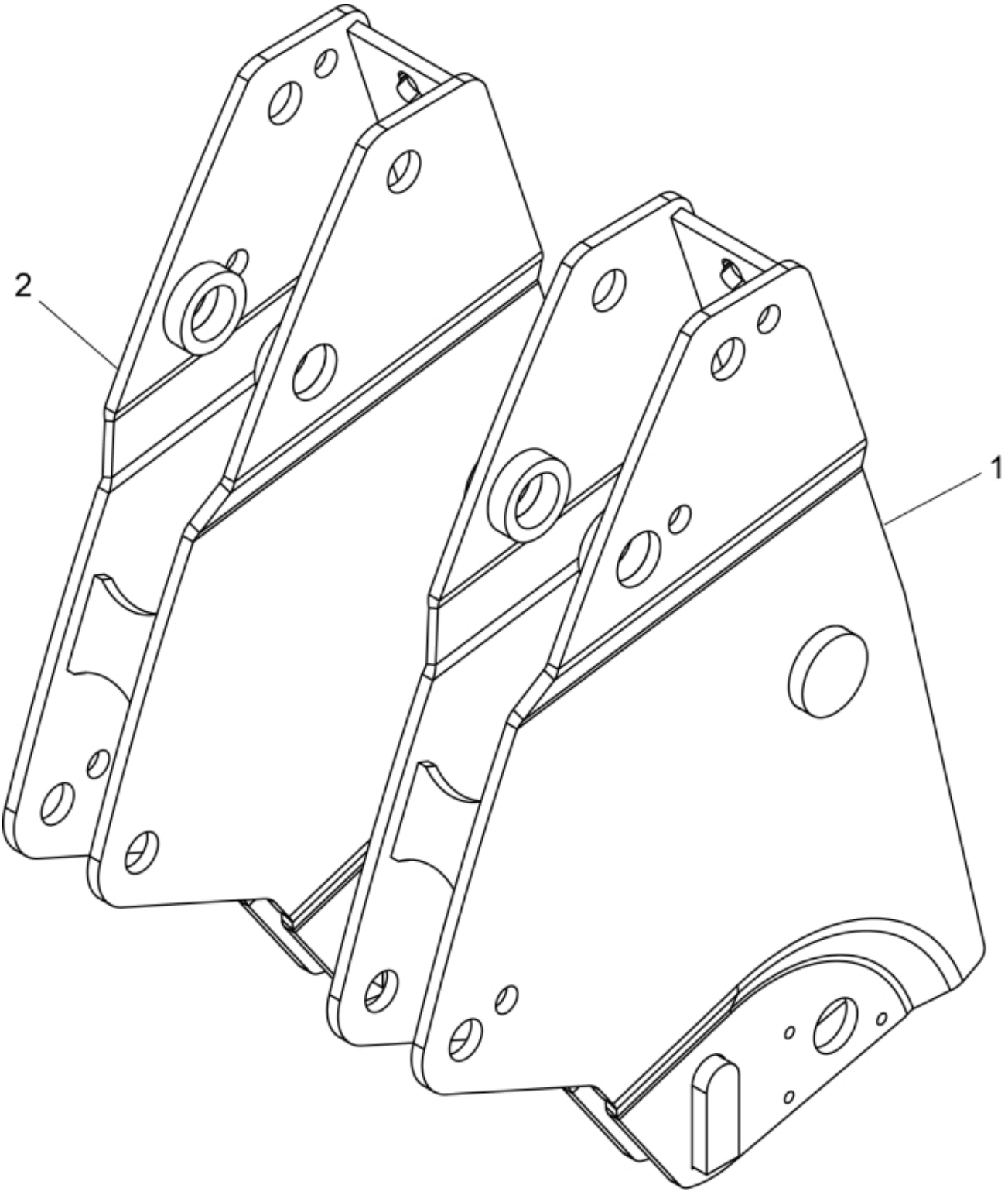

r60105470

© 2025 Jost

Description	MSL
Part assemblies	Bearing box Ext.
Specification	Specification: New Holland Blue

PartNo	Pos	Qty	Name	Specifications
60006811-11	1	1	Bearing box LH	New Holland Blue
60007673-11	2	1	Bearing box RH	New Holland Blue

© 2025 Jost