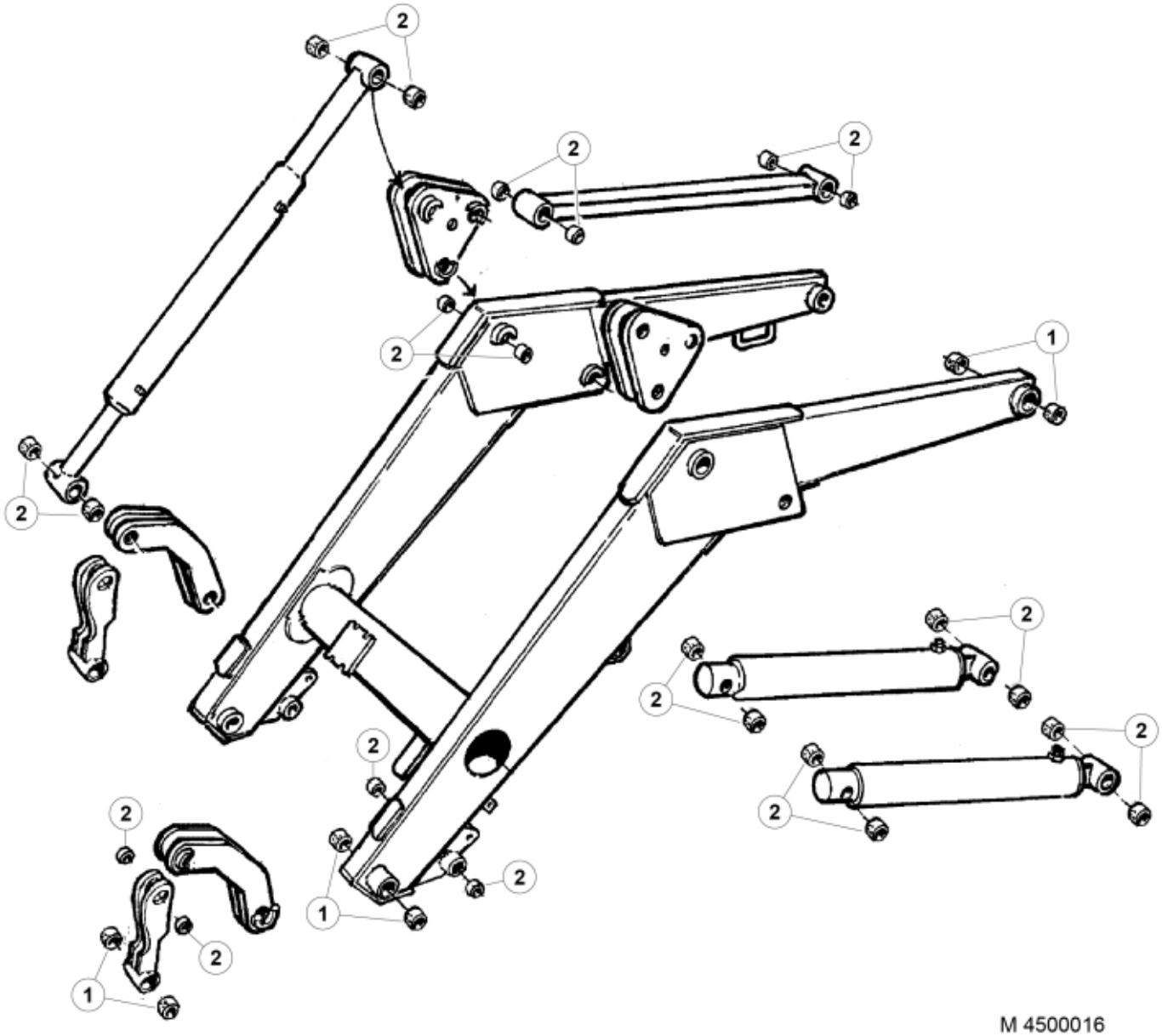

© 2025 Jost

Part assemblies Bushing kit

PartNo	Pos	Qty	Name	Specifications
4500016		1 PCS	Bushing kit	
5018514	1	12	Bushing	D35 L=20
5018515	2	36	Bushing	D30 L=20

© 2025 Jost