Quicke

Silograb® XL

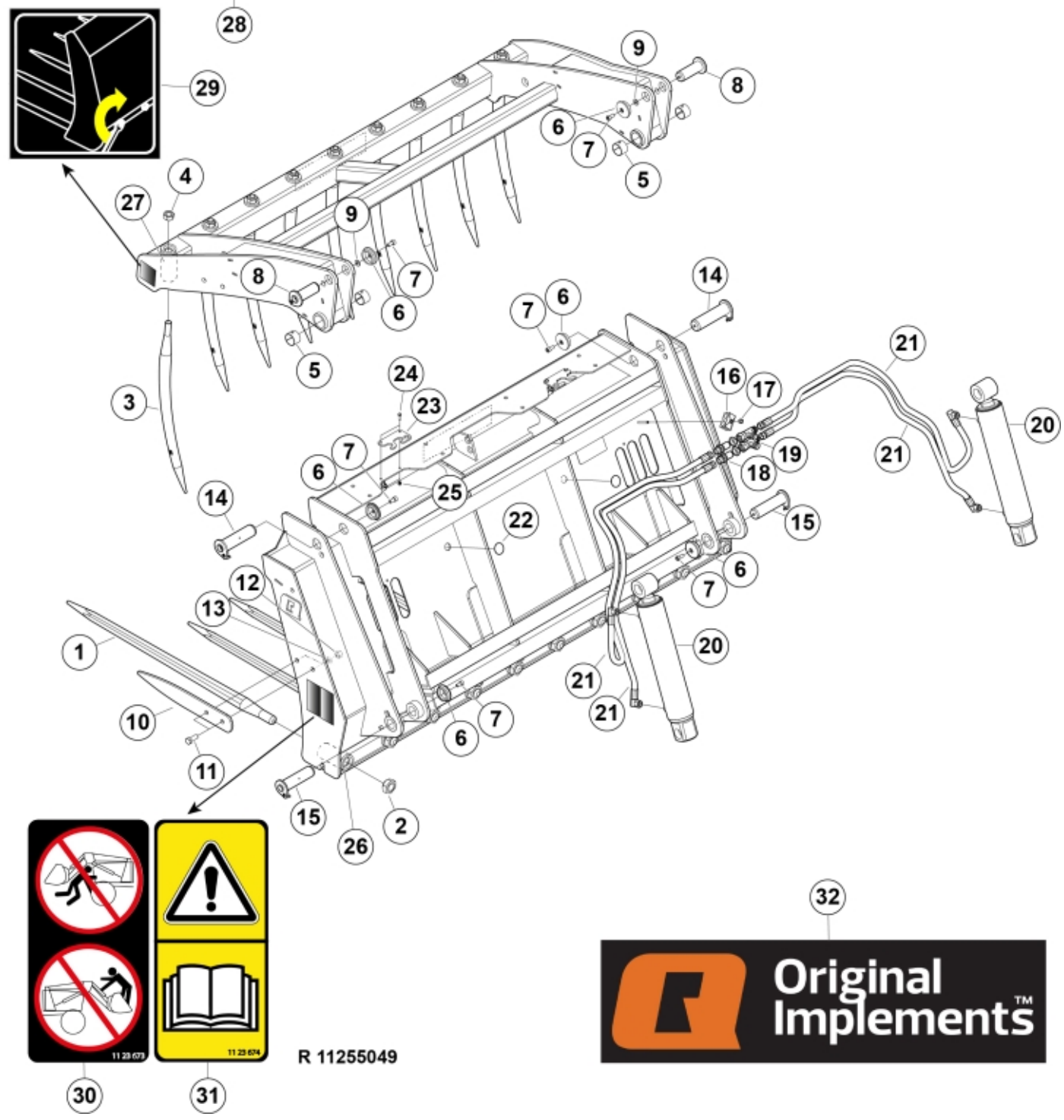

© 2025 Jost

Part assemblies		Silograb XL 190 Forged tines		
Specification		Year From: 8/1/2018 12:00:00 AM		
PartNo	**Pos**	**Qty**	**Name**	**Specifications**
11255049		1	Silograb XL 190 Forged tines	8/1/2018 12:00:00 AM
5068010-17	1	10	Tine with nut	980
5068116	2	1	• Nut	Conus 2
5068112-17	3	9 PCS	Tine with nut	L=680, Curved
5068111	4	1	• Nut	Conus 1
5018904	5	4	Bushing	D40 L=30
5215131	6	6	Locking cover	
5050608	7	6	Screw	MC6S M10x20 Loc
60018058	8	2	Pivot Pin	D=35, L=96mm
5013110	9	2	Washer	BRB 10.5x22x2
11260256-22	10	2	Side tine	
5002127	11	4	Screw	M6S M14 x 35
5011556	12	4	Nut	M14
5013107	13	4	Washer	BRB 15 x 26 x 2
60019828	14	2	Pivot Pin	D=40, L=147mm
60000355	15	2	Pivot Pin	D=35, L=147mm
5016968	16	4	Hose clamp	
5011553	17	8	Nut	M6M M8 Loc-king
11120580	18	2	Adapter cpl.	
5028031	19	2	T-Adapter	
60022048-1	20	2 PCS	Cylinder	
60022686	21	4 PCS	Hose	3/8" L=1350 G90LMC-1/2"GRLM
5022119	22	2	Plug	
60031650-22	23	2 PCS	Pivot post	
5003008	24	4 PCS	Screw	M6x20
20708137	25	4	Nut	M6 FZB, 708137
60016205	26	10	Sleeve	Conus 2
9010120	27	9 PCS	Sleeve	Conus 1 Curved
60004289	28	1 PCS	Decal, Brand	Silograb XL
11136517	29	1	Warning decal	"Tightening of tine"
1123673	30	1	Warning decal	
1123674	31	1	Warning decal	"Read manual"
60001650	32	1 PCS	Decal	Original Implements 361,7x100

© 2025 Jost