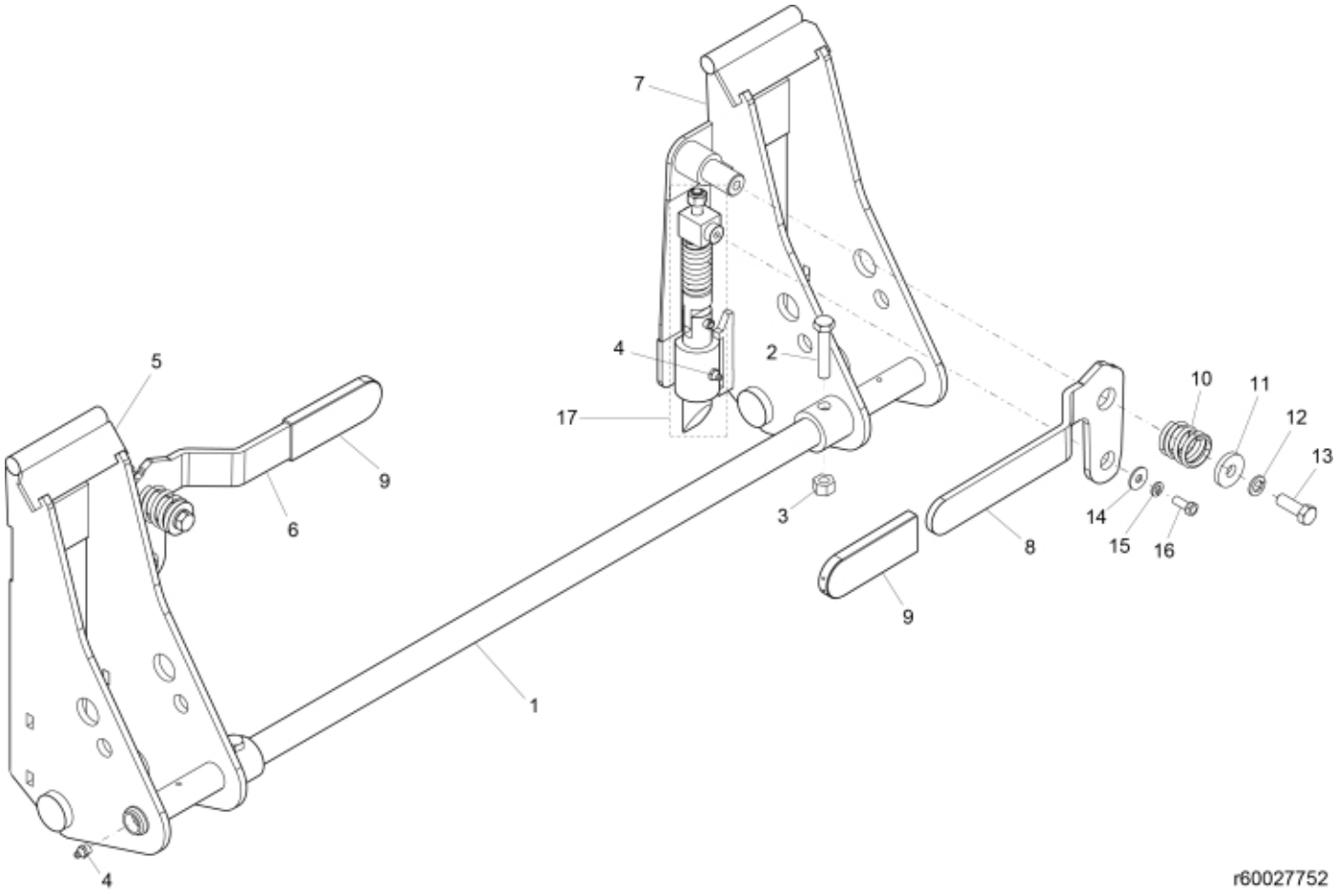

© 2025 Jost

Description	Tool carrier
Part assemblies	Skid Steer
Specification	Specification: Glossy Black
	Specification: Replaces 60018428

PartNo	Pos	Qty	Name	Specifications
60027752-1		1 PCS	Skid Steer	Glossy Black, Replaces 60018428
60016128	1	1 PCS	Shaft	
5002108	2	2	Screw	M6S M12x60
5011555	3	2	Nut	M12 Loc
5023005	4	4	Greaser	M 10 x 1
60027754-1	5	1 PCS	Bracket LH	Glossy Black, SkidSteer
5221533	6	1	Handle LH	
60027755-1	7	1 PCS	Bracket RH	Glossy Black, SkidSteer
5221534	8	1	Handle RH	
5022144	9	2	Cover	
5221539	10	2	Spring	
5013924	11	2	Washer	13x36x6
5013408	12	2	Spring washer	FBB 12,2 x 21,1 x 2,5
5002103	13	2	Screw	M12 x 35
5013916	14	2	Washer	8,4x24x2
5013404	15	2	Spring washer	8,1x14,8x2
5002051	16	2	Screw	M6S 8 x 20
60009527	17	2 PCS	Pin cpl.	

© 2025 Jost