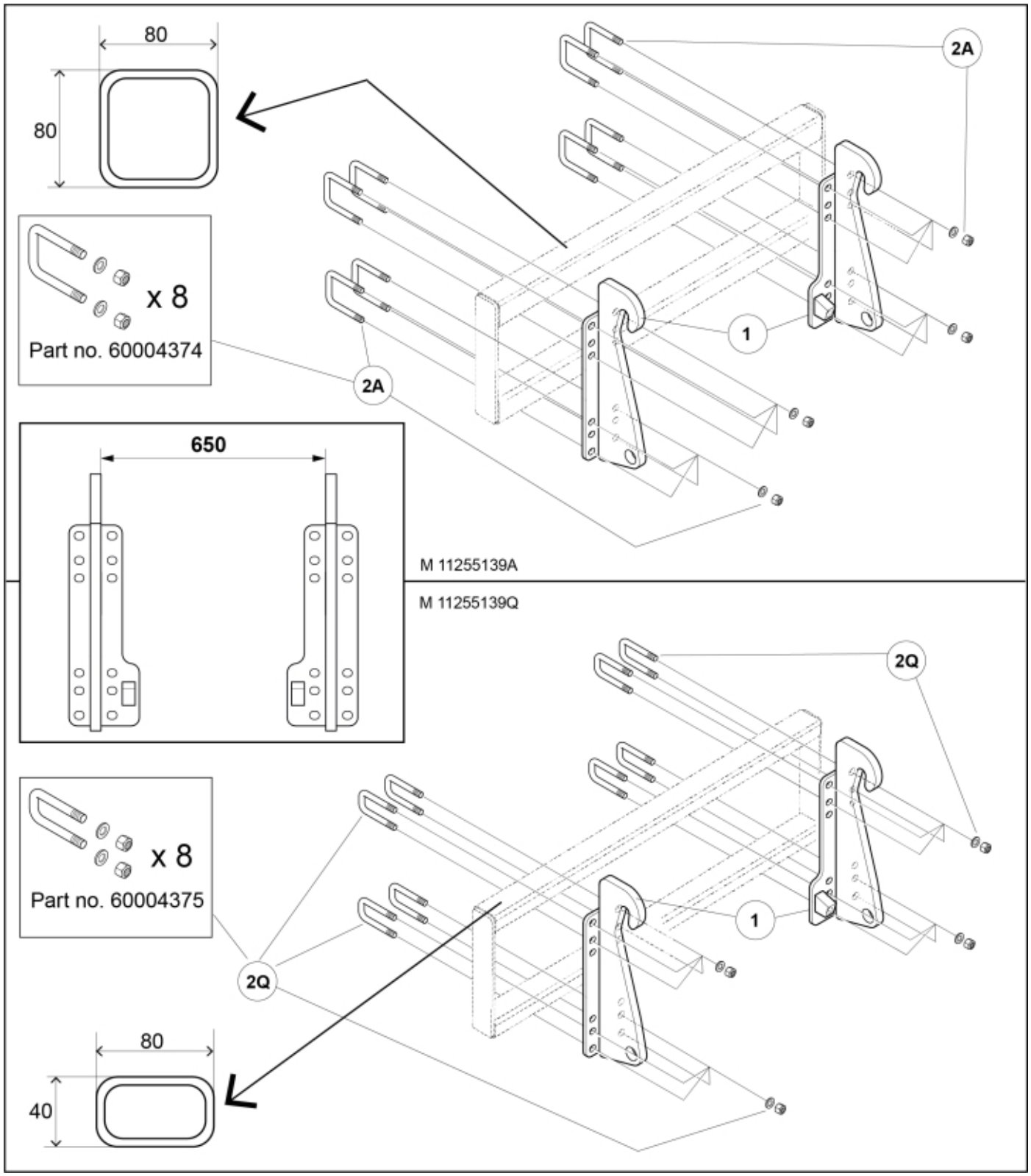
80
80
x 8
Part no. 60004374
2A
1
2A
650
M 11255139A
M 11255139Q
2Q
x 8
Part no. 60004375
1
2Q
80
40

© 2025 Jost

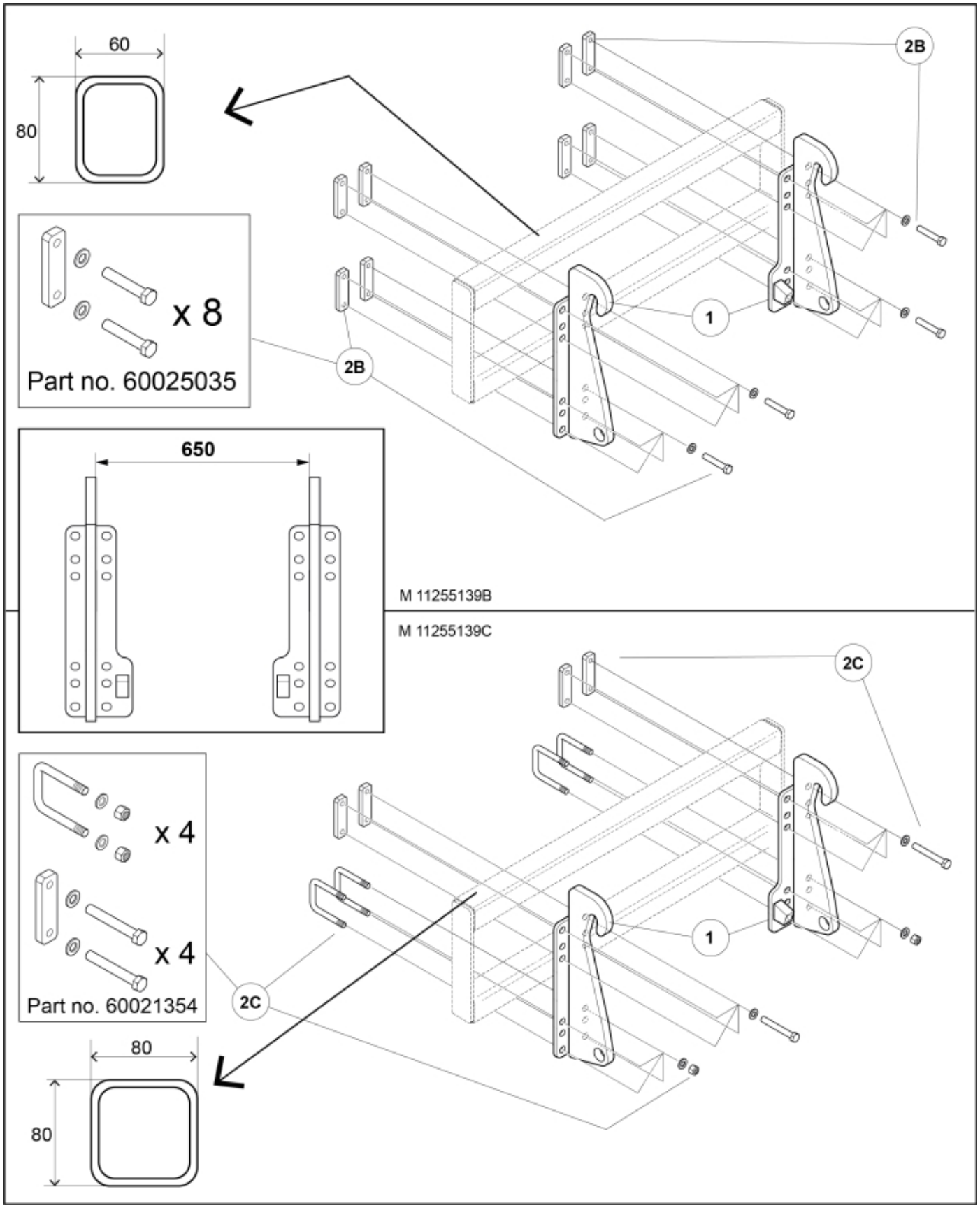
60
80
x 8
Part no. 60025035
2B
1
650
M 11255139B
M 11255139C
2C
x 4
x 4
Part no. 60021354
80
80

© 2025 Jost

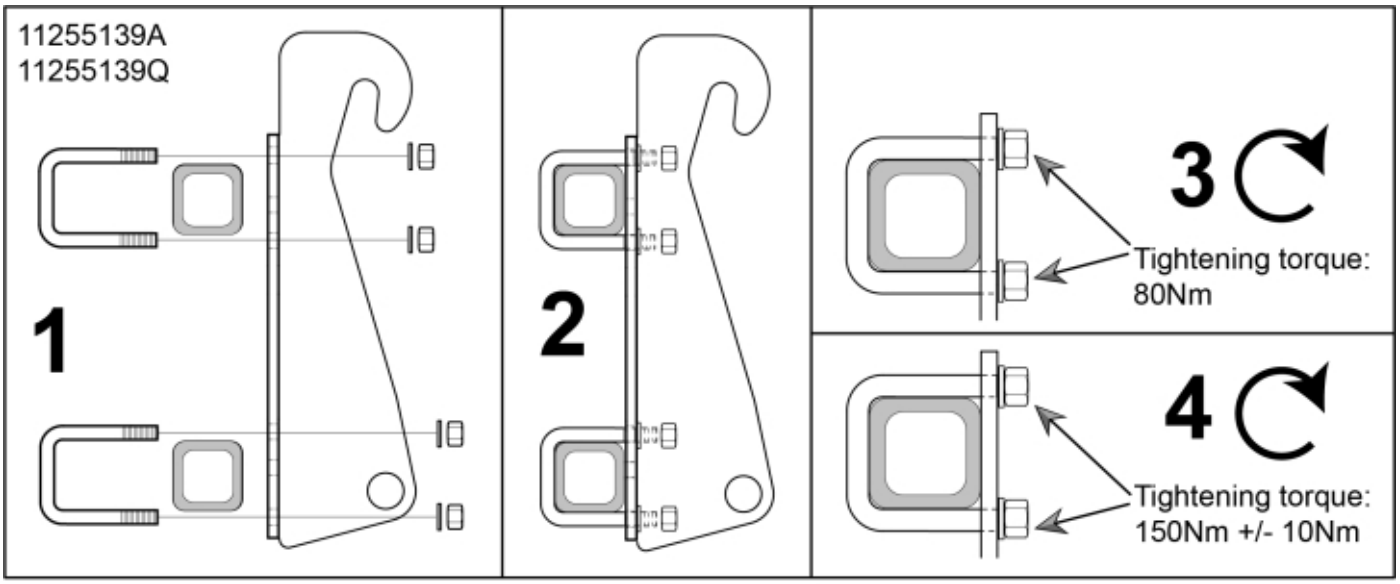
11255139A
11255139Q
1
2
3
Tightening torque:
80Nm
4
Tightening torque:
150Nm +/- 10Nm

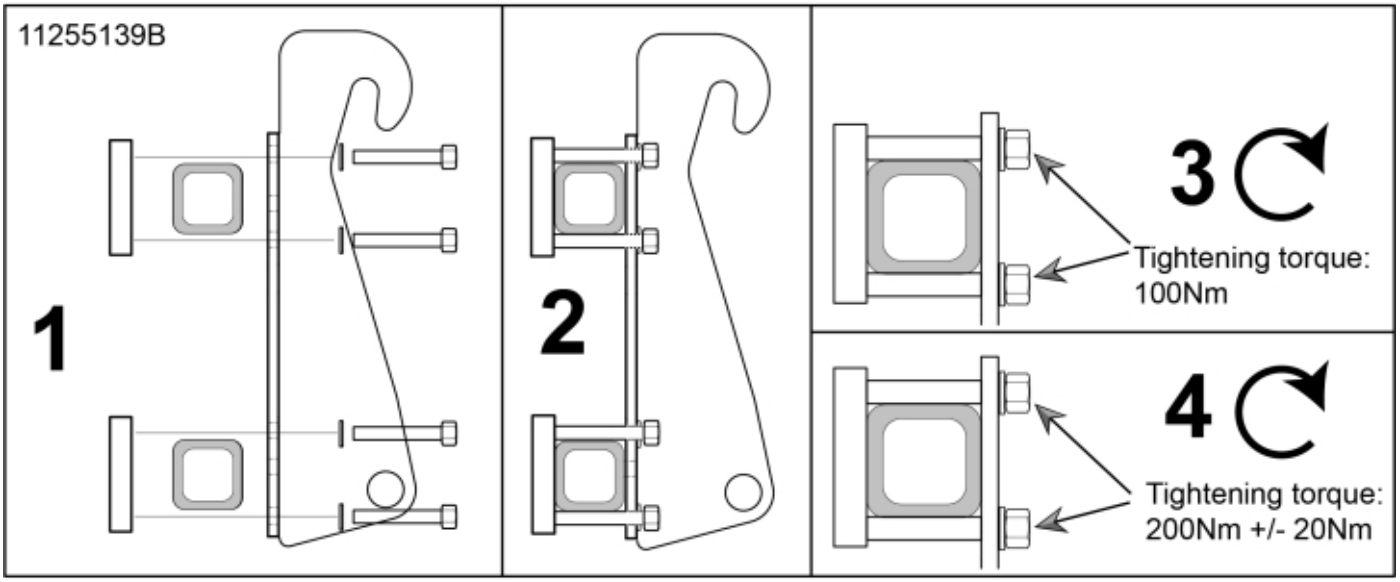
11255139B
1
2
3
Tightening torque:
100Nm
4
Tightening torque:
200Nm +/- 20Nm

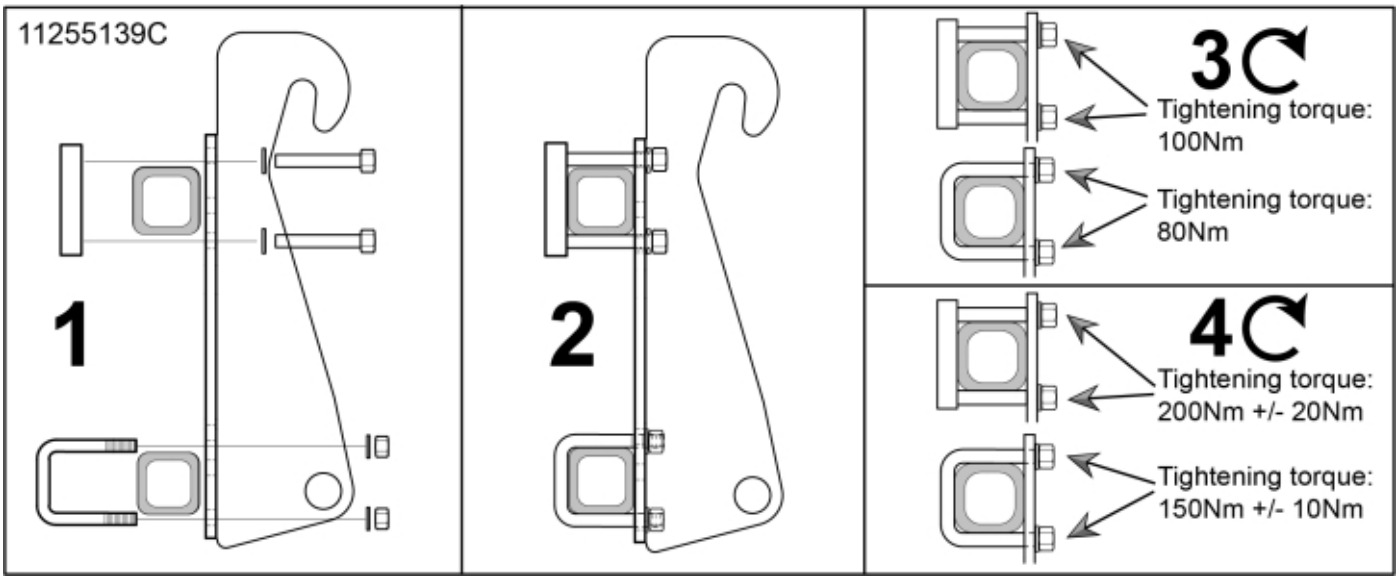
11255139C
1
2
3
Tightening torque:
100Nm
Tightening torque:
80Nm
4
Tightening torque:
200Nm +/- 20Nm
Tightening torque:
150Nm +/- 10Nm

© 2025 Jost

Part assemblies Attachment kit Zettelmeyer 402

PartNo	Pos	Qty	Name	Specifications
60029107	1	1 PCS	Attachment Zettelmeyer 402	
60004374	2A	1 PCS	Bolt kit	
60020469		8	• U-bolt	80x80 M16 (60003288)
5013105		16	• Washer	BRB 17 x 30 x 3 300HV
5011557		16	• Nut	Loc-King M16
60004375	2Q	1 PCS	Bolt kit	
60020468		8 PCS	• U-bolt	80x40 M16 (60003289)
5013105		16	• Washer	BRB 17 x 30 x 3 300HV
5011557		16	• Nut	Loc-King M16
60025035	2B	1 PCS	Bolt kit	
60050544		8 PCS	• Plate	
5050888		16	• Screw	M6S M16x90 10.9
5013105		16	• Washer	BRB 17 x 30 x 3 300HV
60021354	2C	1 PCS	Bolt kit	
60050544		4 PCS	• Plate	
5050810		8	• Screw	M6S M16x120
5013105		16	• Washer	BRB 17 x 30 x 3 300HV
60020469		4	• U-bolt	80x80 M16 (60003288)
5011557		8	• Nut	Loc-King M16

© 2025 Jost