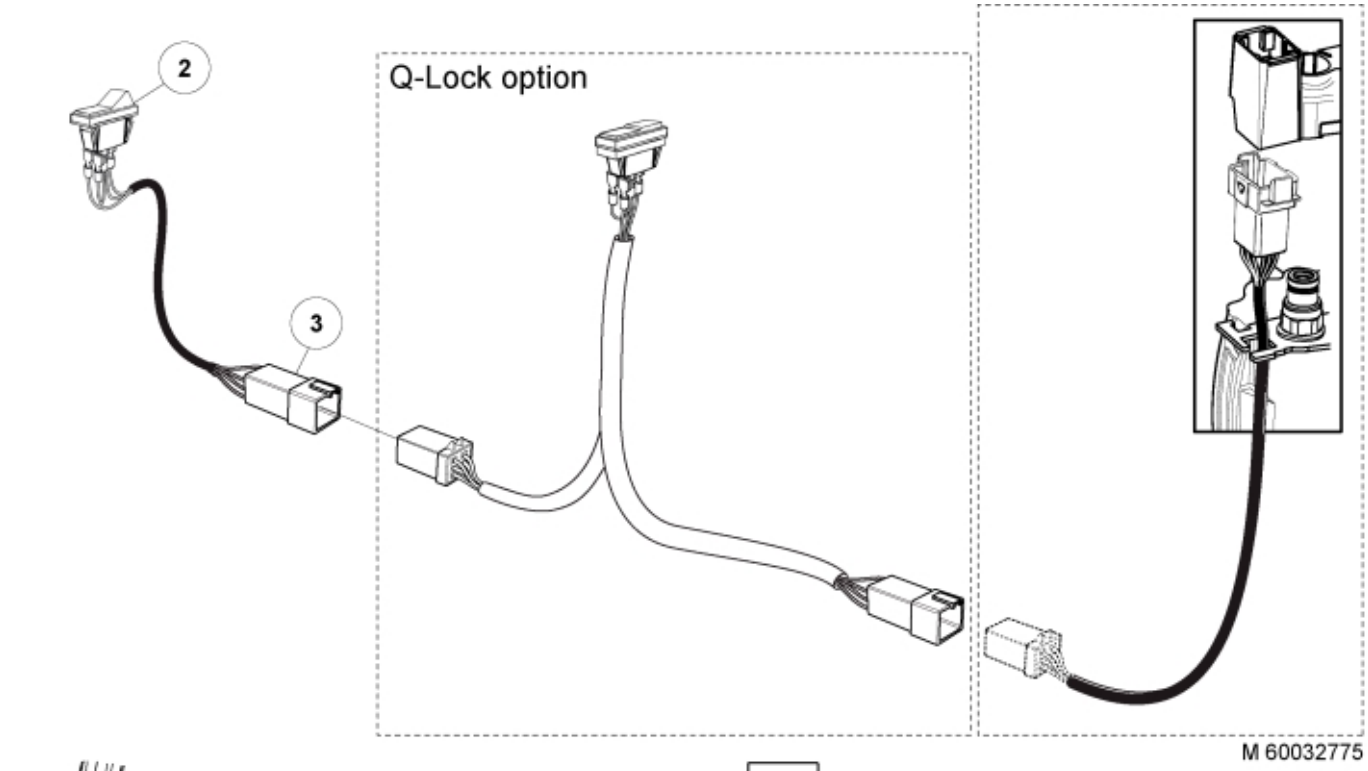

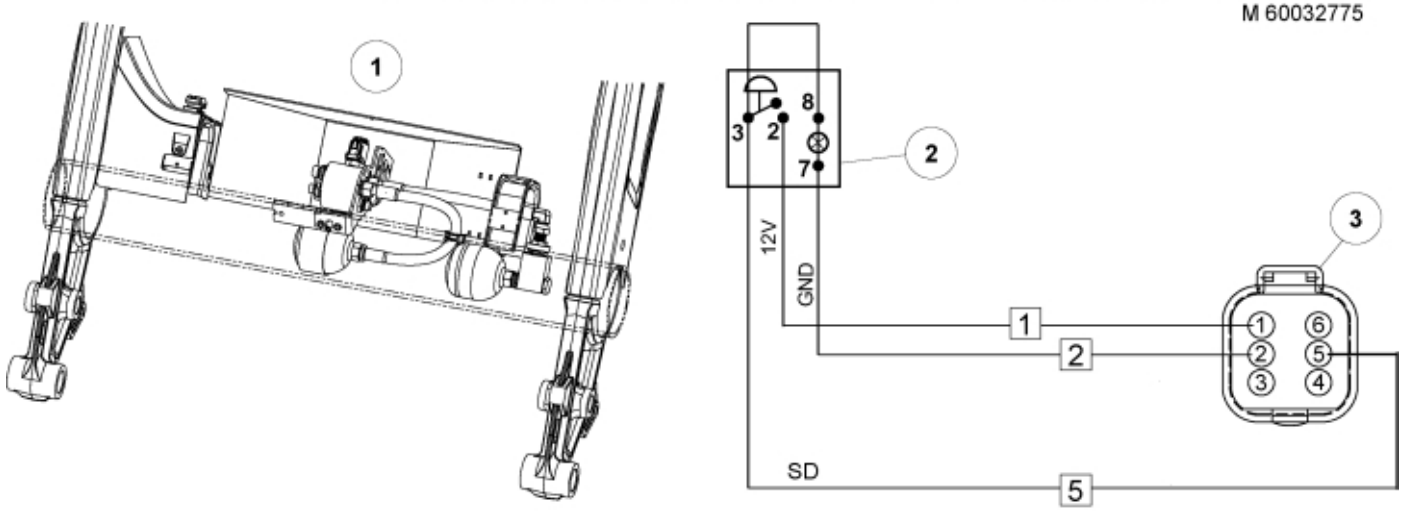

© 2025 Jost

Part assemblies	SoftDrive

PartNo	Pos	Qty	Name	Specifications
60032775		1 PCS	SoftDrive	
60019602	1	1	SoftDrive kit Plus and Minus	2/29/2020 12:00:00 AM
5101074	2	1	Switch	
5101084	3	1	Connector, female	Deutsch 6-pol.

© 2025 Jost