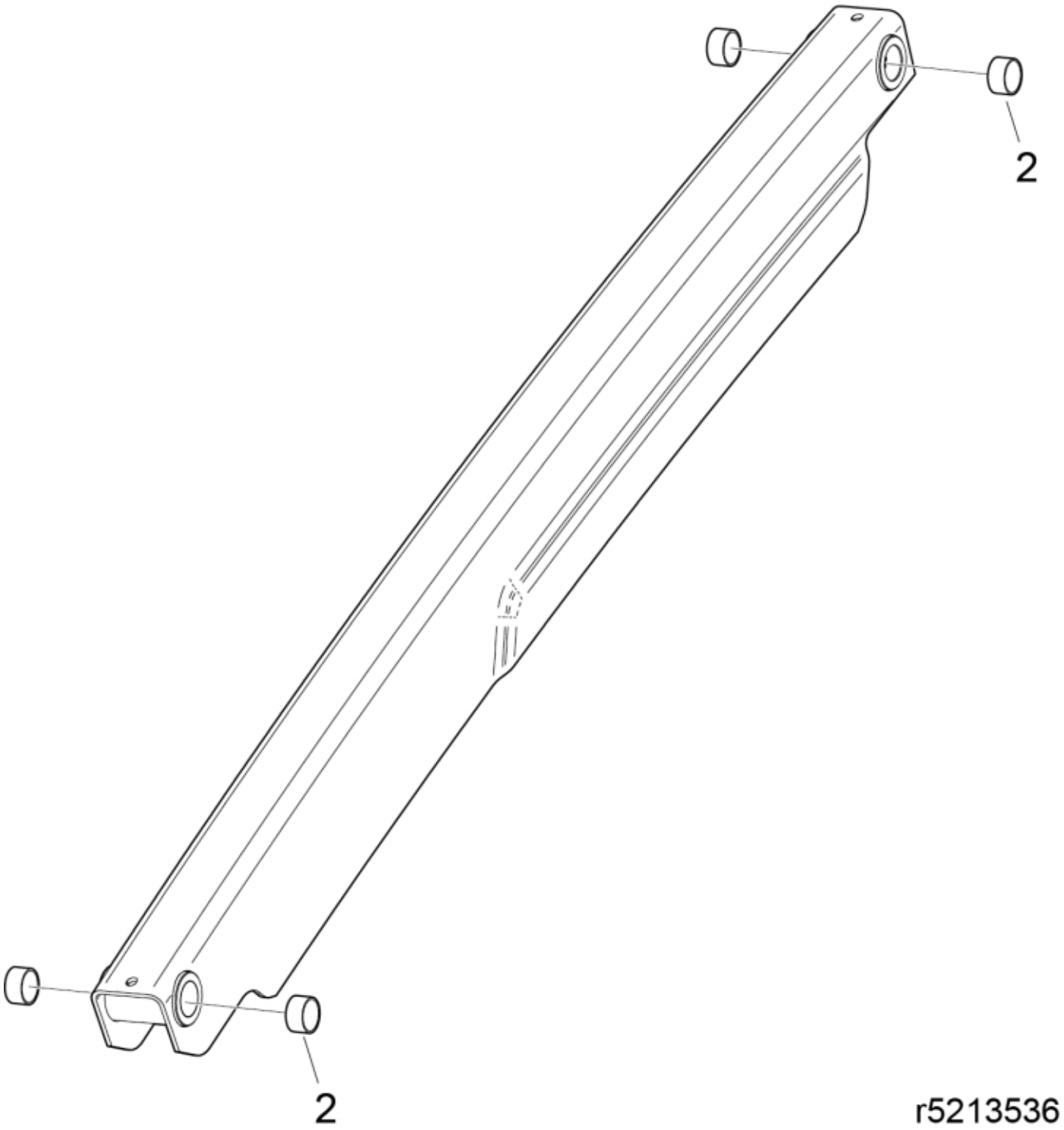

© 2025 Jost

Part assemblies Parallel rod w. bushings

PartNo	Pos	Qty	Name	Specifications
5018515	2	4	Bushing	D30 L=20

© 2025 Jost