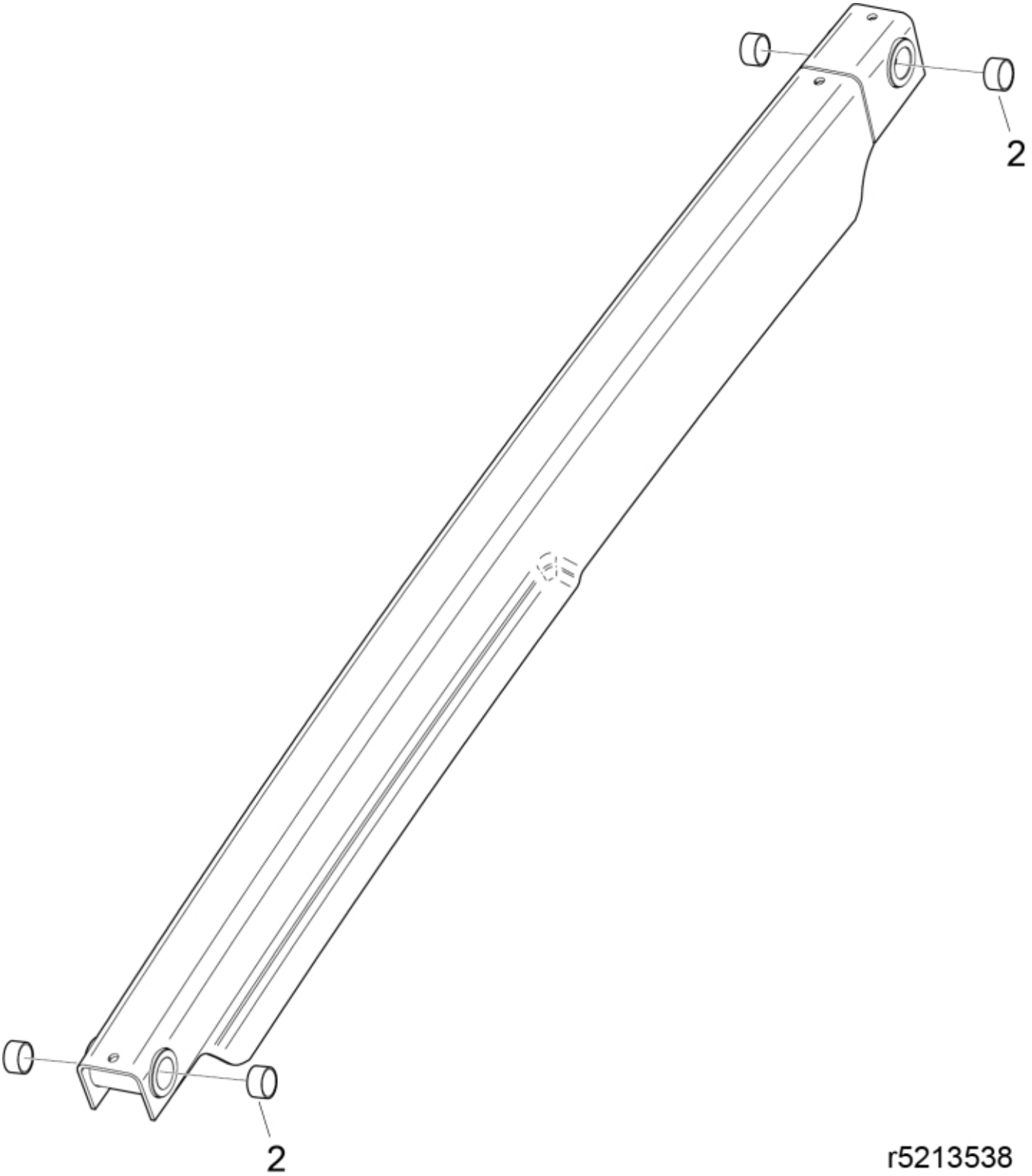

© 2025 Jost

Part assemblies	Parallel rod w. bushings
Specification	Specification: New Holland Blue
	Specification: Replaces 5213538

PartNo	Pos	Qty	Name	Specifications
5018514	2	4	Bushing	D35 L=20

© 2025 Jost