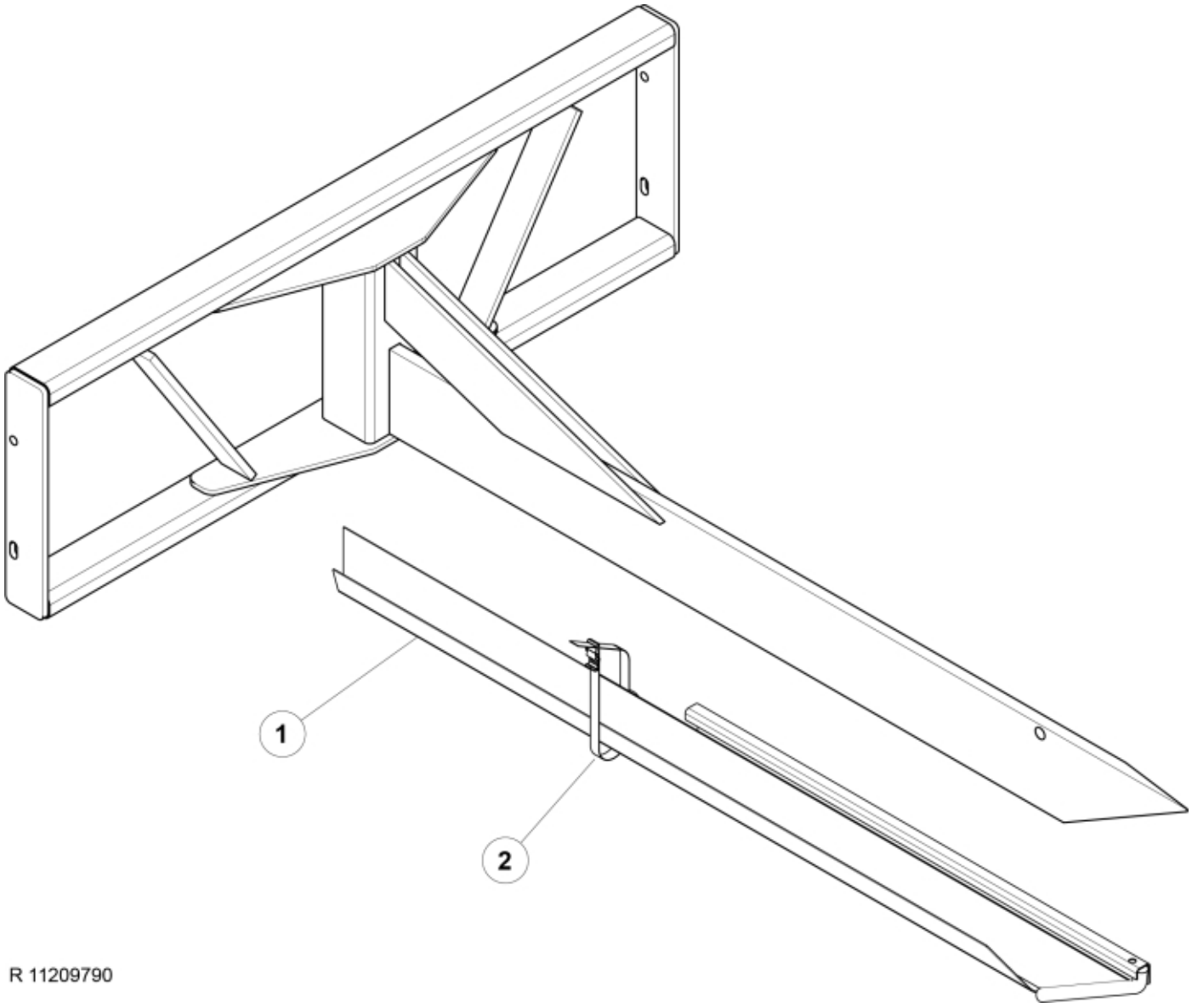

R 11209790

© 2025 Jost

Part assemblies	Silosplit HD
Specification	Year From: 1/1/2009 12:00:00 AM

PartNo	Pos	Qty	Name	Specifications
11209790		1 PCS	Silosplit HD	1/1/2009 12:00:00 AM
1209785	1	1 PCS	Knife protection	
5022145	2	1	•• Tie-down strap	

© 2025 Jost