Quicke

Powergrab™

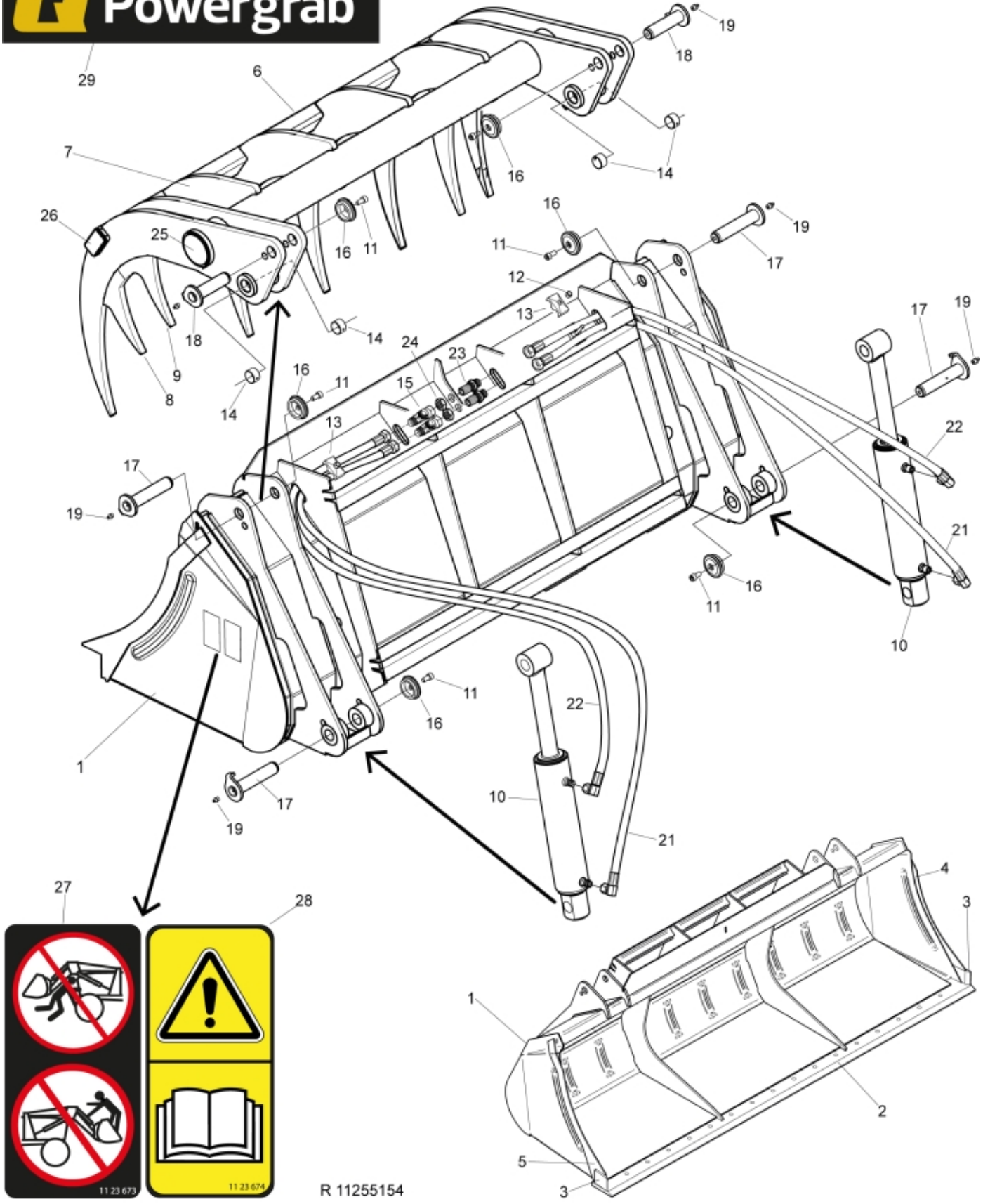

© 2025 Jost

Part assemblies		Powergrab 185 BoH w/o hooks		
Specification		Year From: 1/1/2018 12:00:00 AM		
PartNo	**Pos**	**Qty**	**Name**	**Specifications**
11255154			Powergrab 185 BoH w/o hooks	1/1/2018 12:00:00 AM
60032445	1	1 PCS	Bucket 185 BoH	Powergrab
60044776	2	1 PCS	• Cutting edge	1900mm
11261438	3	2	• Cutting edge	L=80
11261467	4	1 PCS	• Stiffening Plate LH	
11261468	5	1 PCS	• Stiffening Plate RH	
11262094	6	1 PCS	Grab head	
11262091	7	4 PCS	• Claw	Replaces 11261455
11262089	8	2 PCS	• Side claw	Replaces 11261433
11262090	9	2 PCS	• Side claw	Replaces 11261443
60119718-1	10	2	Cylinder	1/26/2026 12:00:00 AM
5004917	11	6	Screw	
5011553	12	2	Nut	M6M M8 Loc-king
5016968	13	2	Hose clamp	
5018514	14	4	Bushing	D35 L=20
5028031	15	2	T-Adapter	
5215131	16	6	Locking cover	
9020063	17	4 PCS	Pin	D=35, L=179
9020107	18	2 PCS	Pin	D=35, L=116
5023005	19	6	Greaser	M 10 x 1
9031432	20	1 PCS	Hose kit	
9031495	21	2	• Hose	3/8"
9031499	22	2	• Hose	3/8"
1120159	23	2	Adaptor	
5011757	24	2	Nut	
11261471	25	2	Plastic cover	
11261472	26	2 PCS	Plastic cover tube	
1123673	27	1	Warning decal	
1123674	28	1	Warning decal	"Read manual"
11137143	29	1 PCS	Decal	Powergrab

© 2025 Jost