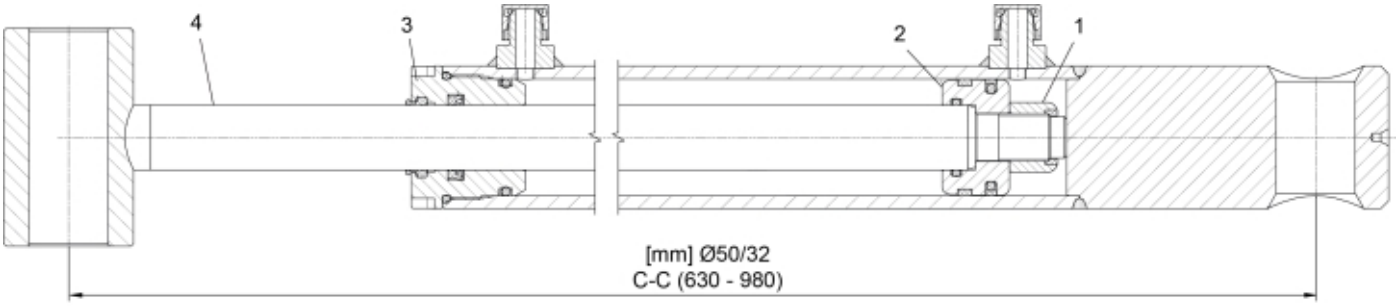

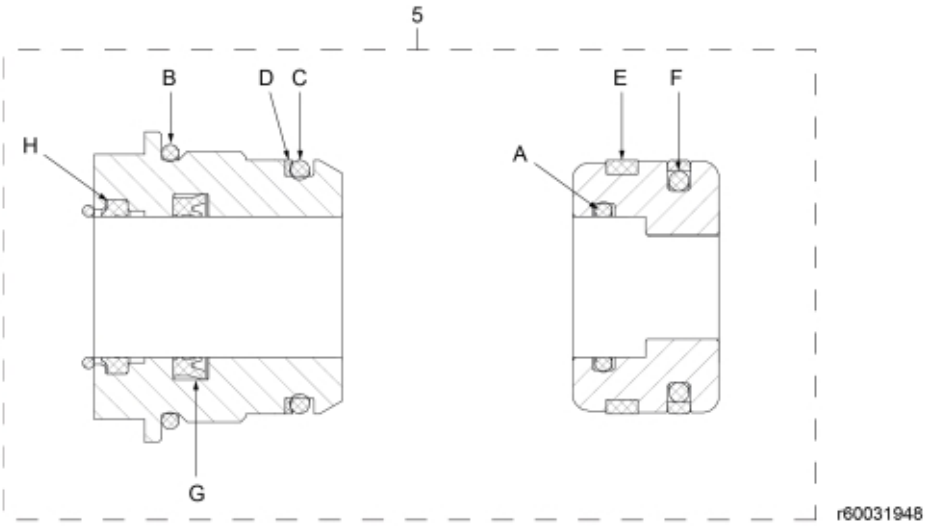

© 2025 Jost

Description	50/32
Part assemblies	Cylinder
Specification	Specification: Glossy Black. Replaces 12724810-1

PartNo	Pos	Qty	Name	Specifications
60015154	1	1	Locking nut	
60015150	2	1	Piston	
60015181	3	1 PCS	Bearing	
60035373	4	1	Piston rod cpl.	
60010524	5	1	Seal kit	
60011382	A	1	• O-ring	
60011373	B	1	• O-ring	
60011372	C	1	• O-ring	
60011371	D	1	• Support Ring	
60011370	E	1	• Wear ring	
60011367	F	1	• Piston seal	
60011376	G	1	• Seal kit	
60011375	H	1	• Wiper	

© 2025 Jost