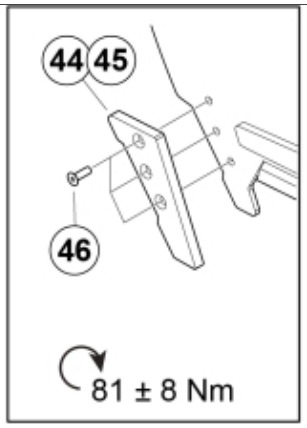
44
45
46
81 ± 8 Nm

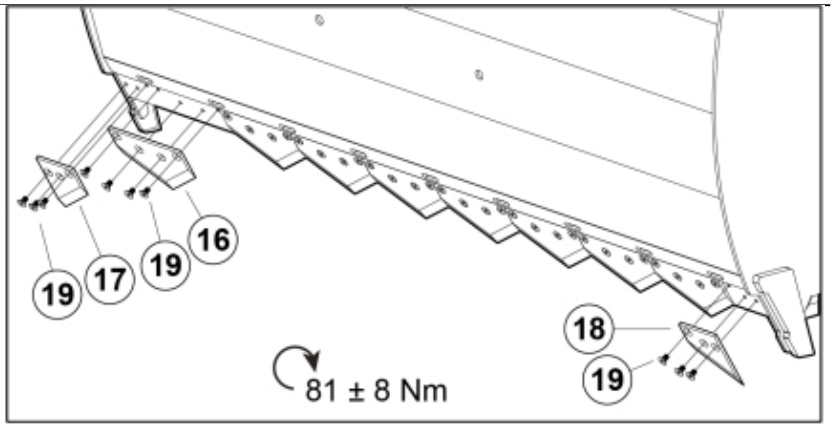
19
17
19
16
18
19
81 ± 8 Nm

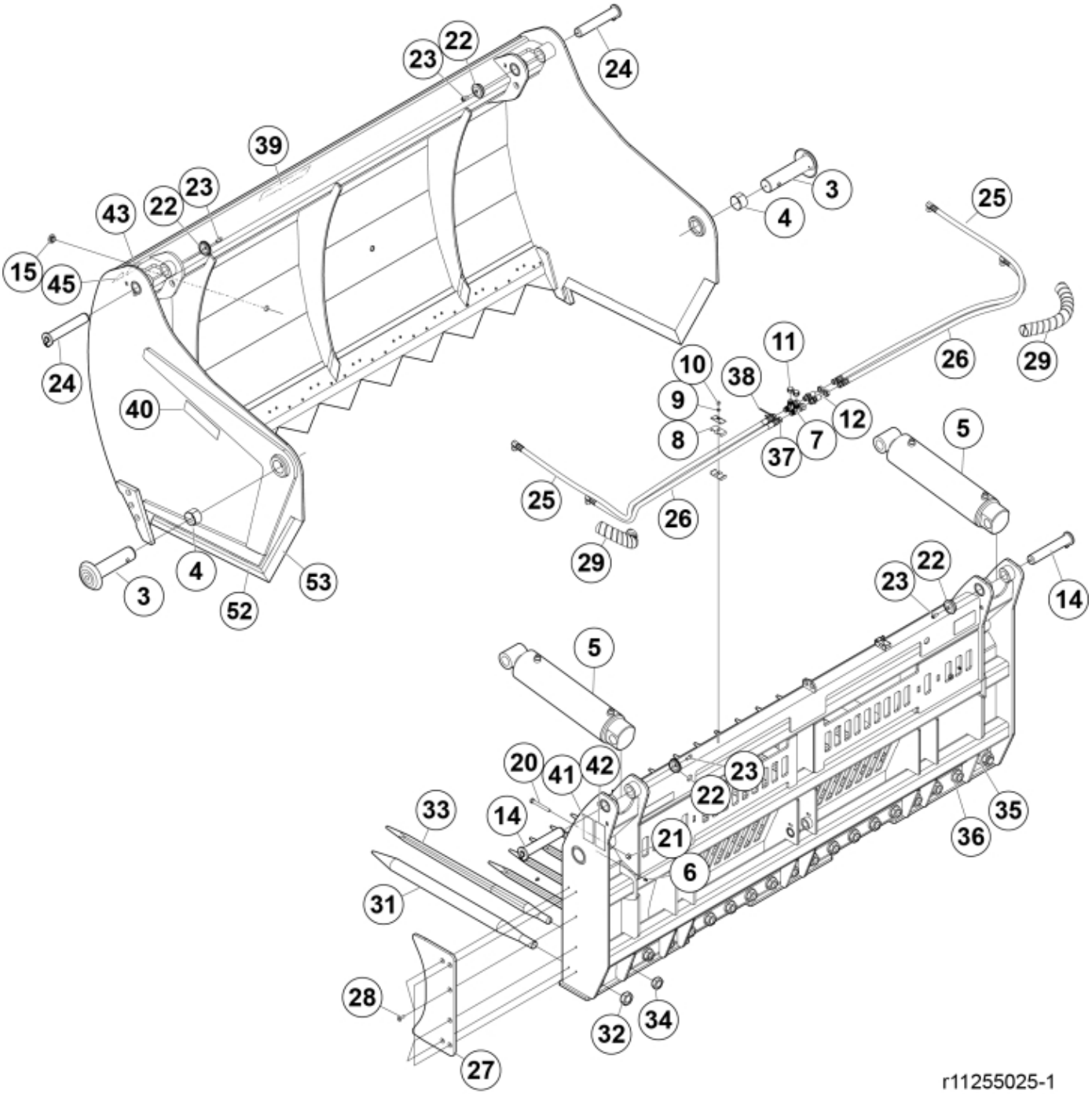
23
22
24
39
23
22
43
15
45
24
40
3
4
53
52
3
4
25
26
29
11
10
38
9
8
12
7
37
5
25
26
29
23
22
14
5
20
41
42
23
22
33
14
21
6
35
36
31
28
32
34
27
r11255025-1

© 2025 Jost

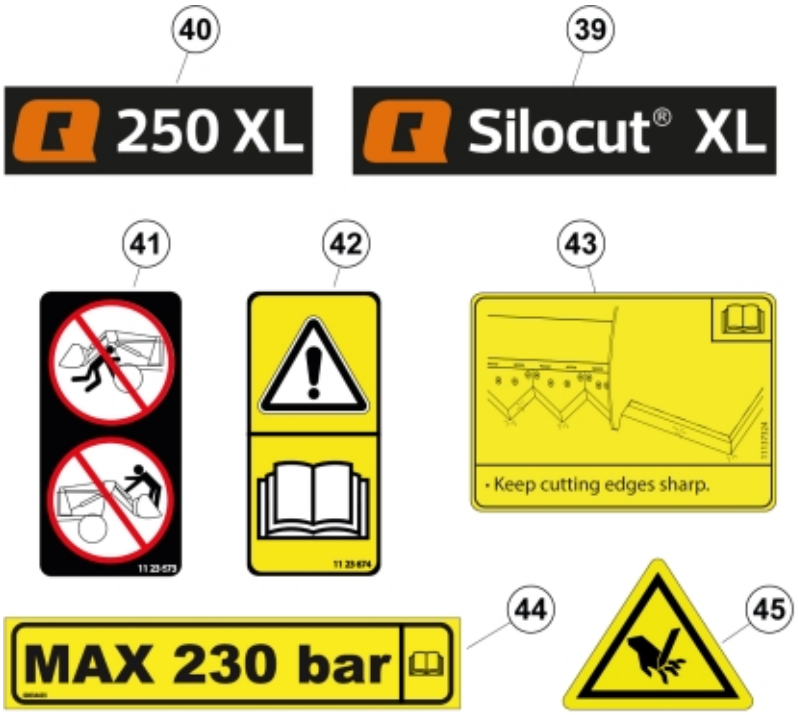



r11255025-11255047_2

© 2025 Jost

Part assemblies		Silocut XL 250 Forged tines		
Specification		Year From: 8/1/2018 12:00:00 AM		
PartNo	**Pos**	**Qty**	**Name**	**Specifications**
11255025		1	Silocut XL 250 Forged tines	8/1/2018 12:00:00 AM
60027947	3	2	Pin	
5051187	4	2	Bushing	
60119716-1	5	2	Cylinder	4/29/2026 12:00:00 AM
5023005	6	2	Greaser	M 10 x 1
5028031	7	2	T-Adapter	
5051191	8	2	Hose clamp	
5013101	9	2	Washer	BRB 8,4 x 16
5011553	10	2	Nut	M6M M8 Loc-king
5028311	11	2	Plug	
11120580	12	2	Adapter cpl.	
60006393	14	2	Pin	
5022119	15	2	Plug	
11262629-22	16	9	Cutting edge	250mm
11262628-22	17	1	Cutting edge RH	125mm
11262627-22	18	1	Cutting edge LH	125mm
5050610	19	42	Screw	MF6S M12X20 (12.9)
5002114	20	2	Screw	M6S 12x100
5011555	21	2	Nut	M12 Loc
5215131	22	4	Locking cover	
5050608	23	4	Screw	MC6S M10x20 Loc
60030256	24	2	Pin cpl.	
60030584		1	Hose kit	
60030576	25	2	• Hose	1/2" L=1800 1/2" G90LMC 1/2" GRLM
60030582	26	2	• Hose	1/2" L=1450 1/2" G90LMC 1/2" GRLM
60029953	27	2	Plate	
5005990	28	12	Screw	MF6S M10 x 30 (10.9)
5034439	29	2	Protection sleeve	
60030013-17	31	2	Tine with nut	
5068119	32	1	• Nut	Conus 3
5068010-17	33	18	Tine with nut	980
5068116	34	1	• Nut	Conus 2
11262646	35	2	Sleeve	Conus 3
60016205	36	18	Sleeve	Conus 2
5022177	37	1	Cable tie	Red
5022179	38	1	Cable tie	Blue
60034424	39	1 PCS	Decal	"Silocut XL"
60034530	40	2 PCS	Decal	"250 XL"
1123673	41	1	Warning decal	
1123674	42	1	Warning decal	"Read manual"
11137324	43	1	Warning decal	"Keep cutting edges sharp"
60034425	44	1	Warning decal	
11136516	45	1	Warning decal	
11136459	46	1	Warning decal	Only for North Am. Warning triangle
11136447	47	2	Warning decal	Only for North Am. DANGER
60049830-22	48	1 PCS	Side tine	LH
60049829-22	49	1 PCS	Side tine	RH
5051849	50	6 PCS	Screw	MF6S M12x40

© 2025 Jost

60027873	52	2	Cutting edge
60027313	53	2	Cutting edge

© 2025 Jost