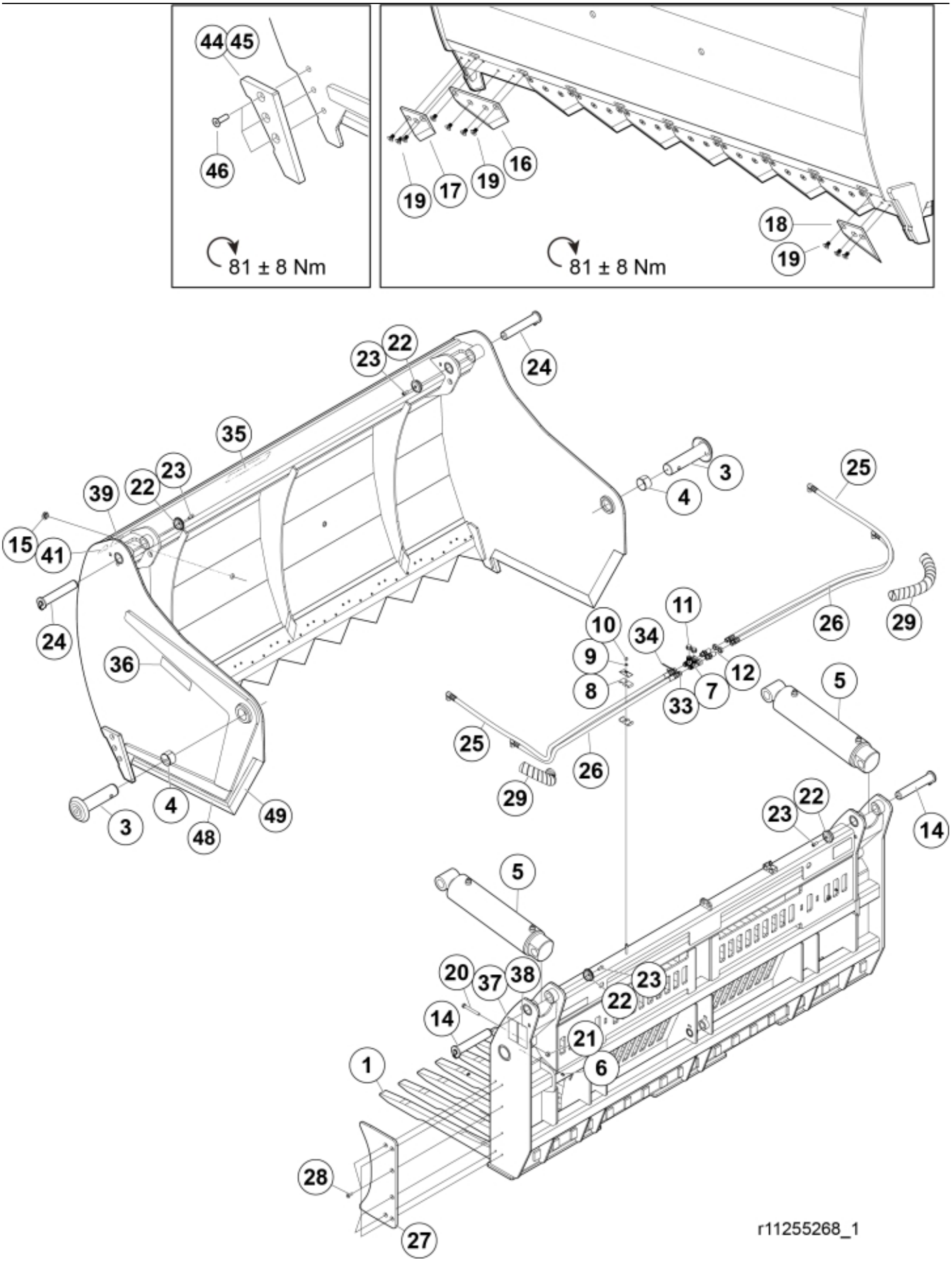
44
45
46
81 ± 8 Nm
19
17
19
16
18
19
81 ± 8 Nm
23
22
24
35
39
22
23
15
41
24
36
3
4
48
49
3
4
25
26
29
11
10
34
9
8
12
7
33
5
25
26
29
23
22
14
5
20
37
38
14
1
28
27
23
22
21
6
r11255268_1

© 2025 Jost

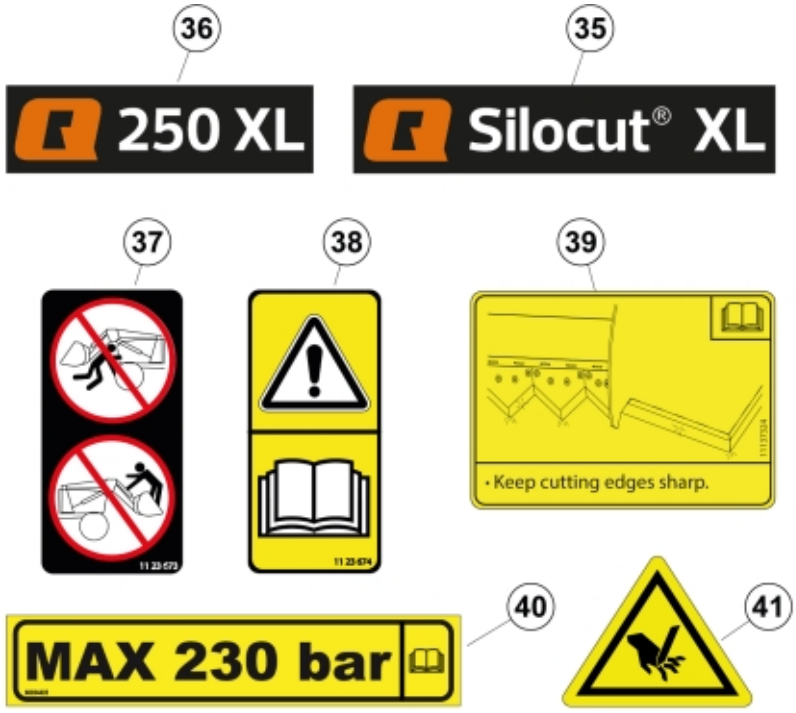



r11255061-11255109-11255267-11255268_2

© 2025 Jost

Part assemblies	Silocut XL 250 Profiled tines
Specification	Year From: 8/1/2018 12:00:00 AM

PartNo	Pos	Qty	Name	Specifications
11255268		1	Silocut XL 250 Profiled tines	8/1/2018 12:00:00 AM
60034749	1	20	Tine	
60027947	3	2	Pin	
5051187	4	2	Bushing	
60119716-1	5	2	Cylinder	4/29/2026 12:00:00 AM
5023005	6	2	Greaser	M 10 x 1
5028031	7	2	T-Adapter	
5051191	8	2	Hose clamp	
5013101	9	2	Washer	BRB 8,4 x 16
5011553	10	2	Nut	M6M M8 Loc-king
5028311	11	2	Plug	
11120580	12	2	Adapter cpl.	
60006393	14	2	Pin	
5022119	15	2	Plug	
11262629-22	16	9	Cutting edge	250mm
11262628-22	17	1	Cutting edge RH	125mm
11262627-22	18	1	Cutting edge LH	125mm
5050610	19	42	Screw	MF6S M12X20 (12.9)
5002114	20	2	Screw	M6S 12x100
5011555	21	2	Nut	M12 Loc
5215131	22	4	Locking cover	
5050608	23	4	Screw	MC6S M10x20 Loc
60030256	24	2	Pin cpl.	
60030584		1	Hose kit	
60030576	25	2	• Hose	1/2" L=1800 1/2" G90LMC 1/2" GRLM
60030582	26	2	• Hose	1/2" L=1450 1/2" G90LMC 1/2" GRLM
60029953	27	2	Plate	
5005990	28	12	Screw	MF6S M10 x 30 (10.9)
5034439	29	2	Protection sleeve	
5022177	33	1	Cable tie	Red
5022179	34	1	Cable tie	Blue
60034424	35	1 PCS	Decal	"Silocut XL"
60034530	36	2 PCS	Decal	"250 XL"
1123673	37	1	Warning decal	
1123674	38	1	Warning decal	"Read manual"
11137324	39	1	Warning decal	"Keep cutting edges sharp"
60034425	40	1	Warning decal	
11136516	41	1	Warning decal	
11136459	42	1	Warning decal	Only for North Am. Warning triangle
11136447	43	2	Warning decal	Only for North Am. DANGER
60049830-22	44	1 PCS	Side tine	LH
60049829-22	45	1 PCS	Side tine	RH
5051849	46	6 PCS	Screw	MF6S M12x40
60027873	48	2	Cutting edge	
60027313	49	2	Cutting edge	

© 2025 Jost