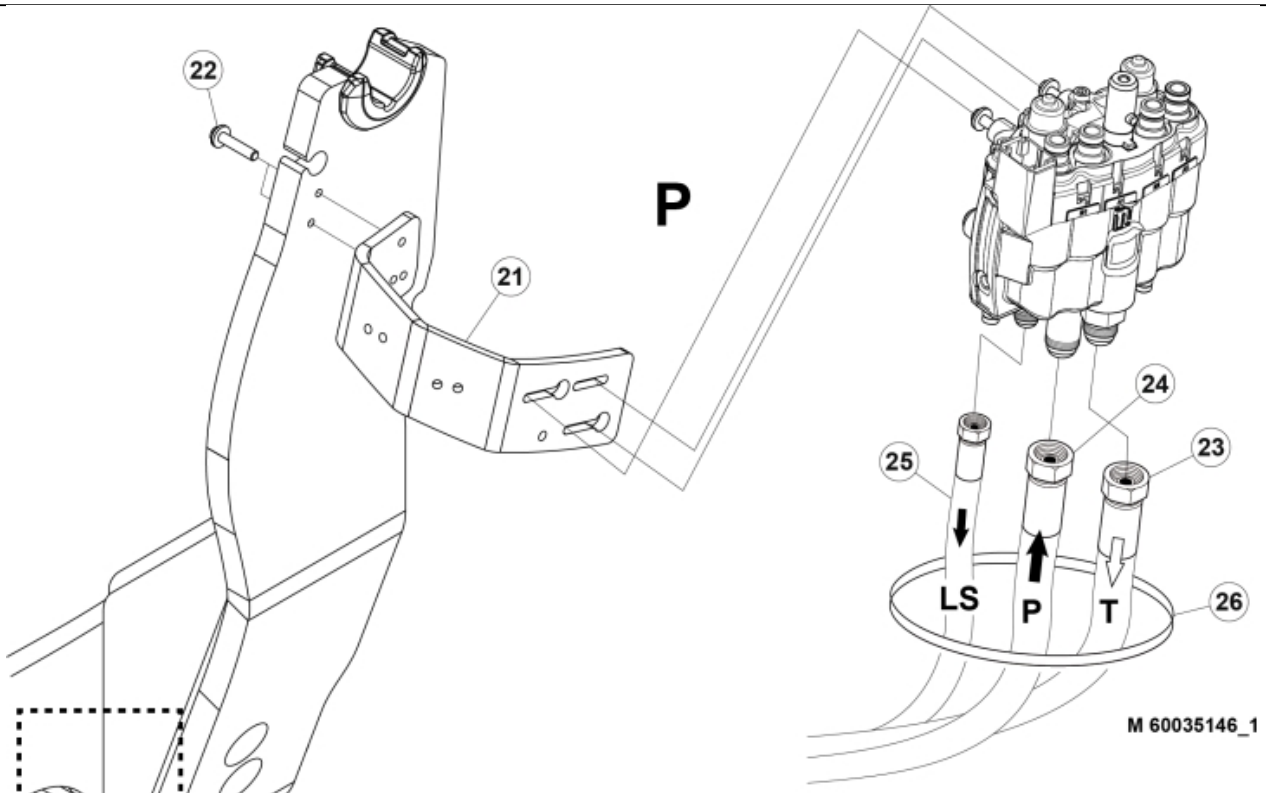

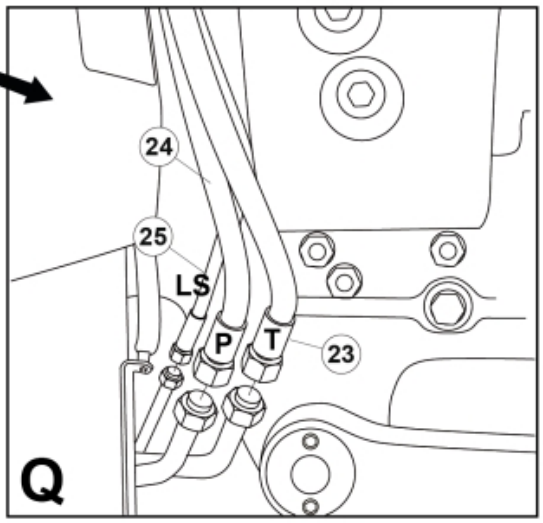

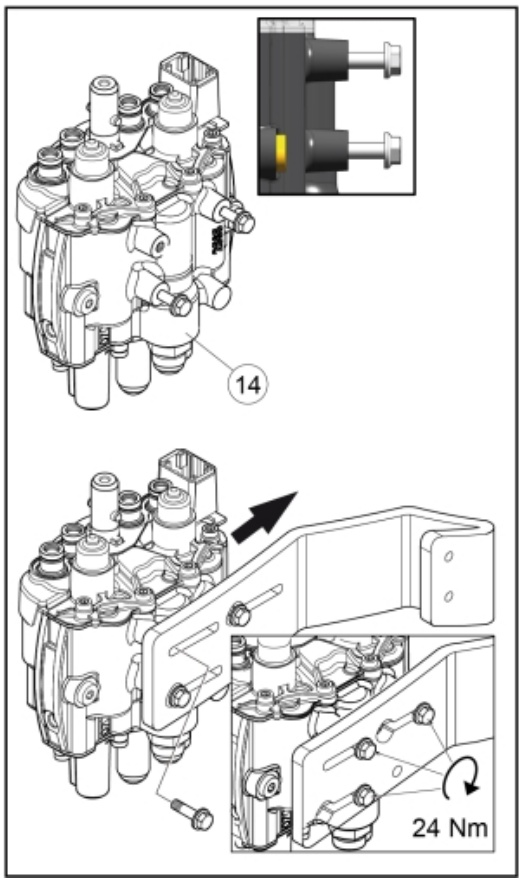

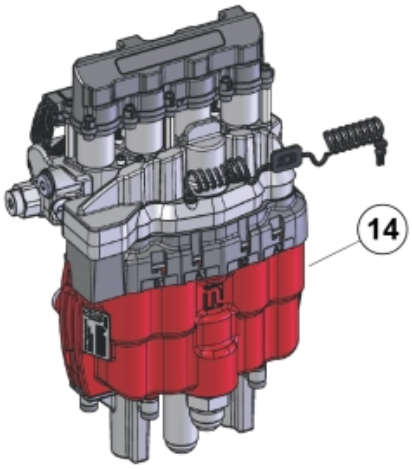

© 2025 Jost

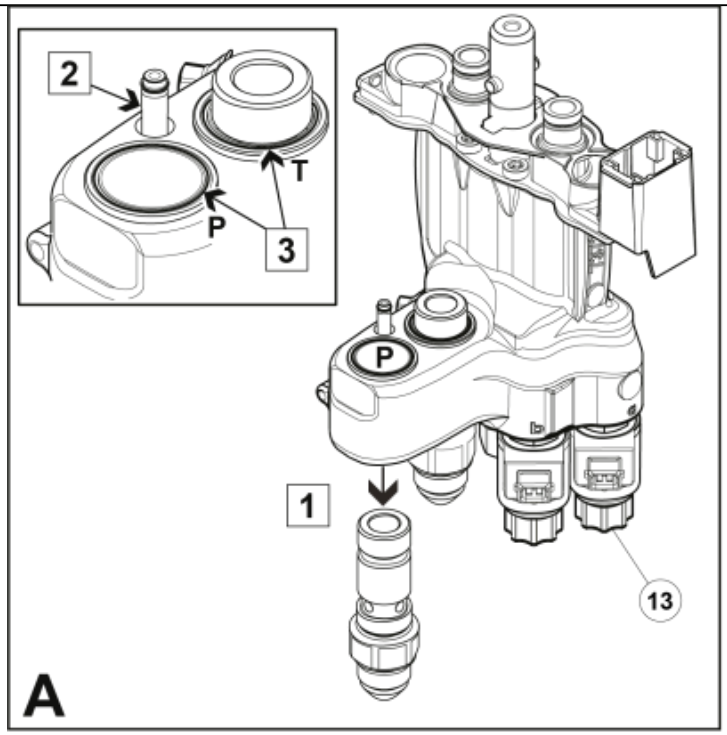

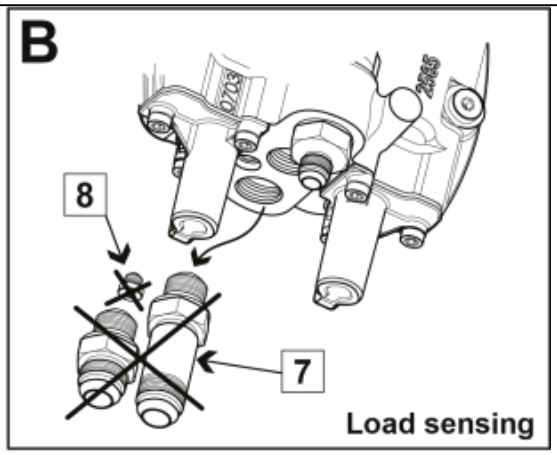

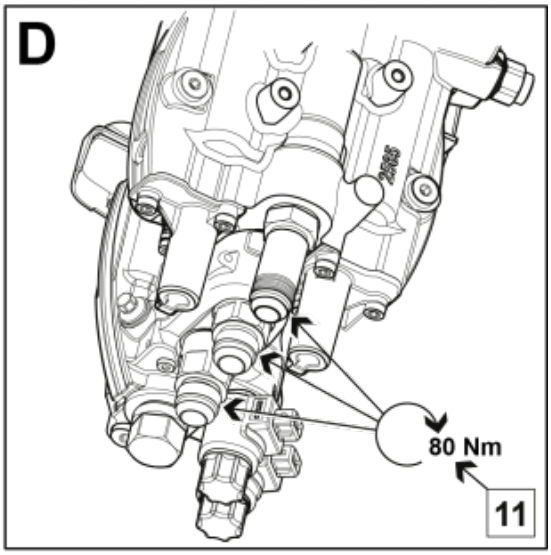

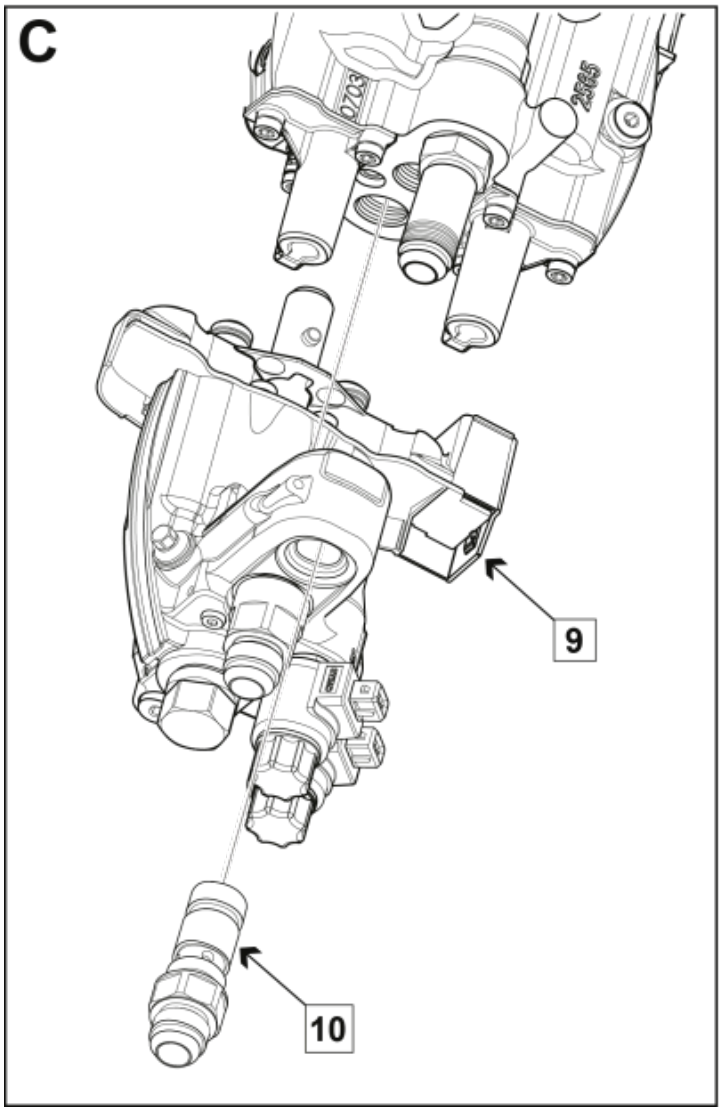

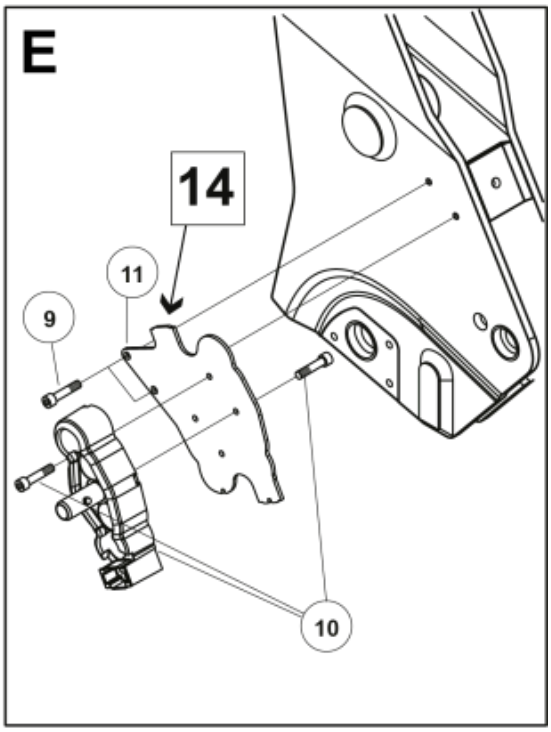

M 60035146_2

© 2025 Jost

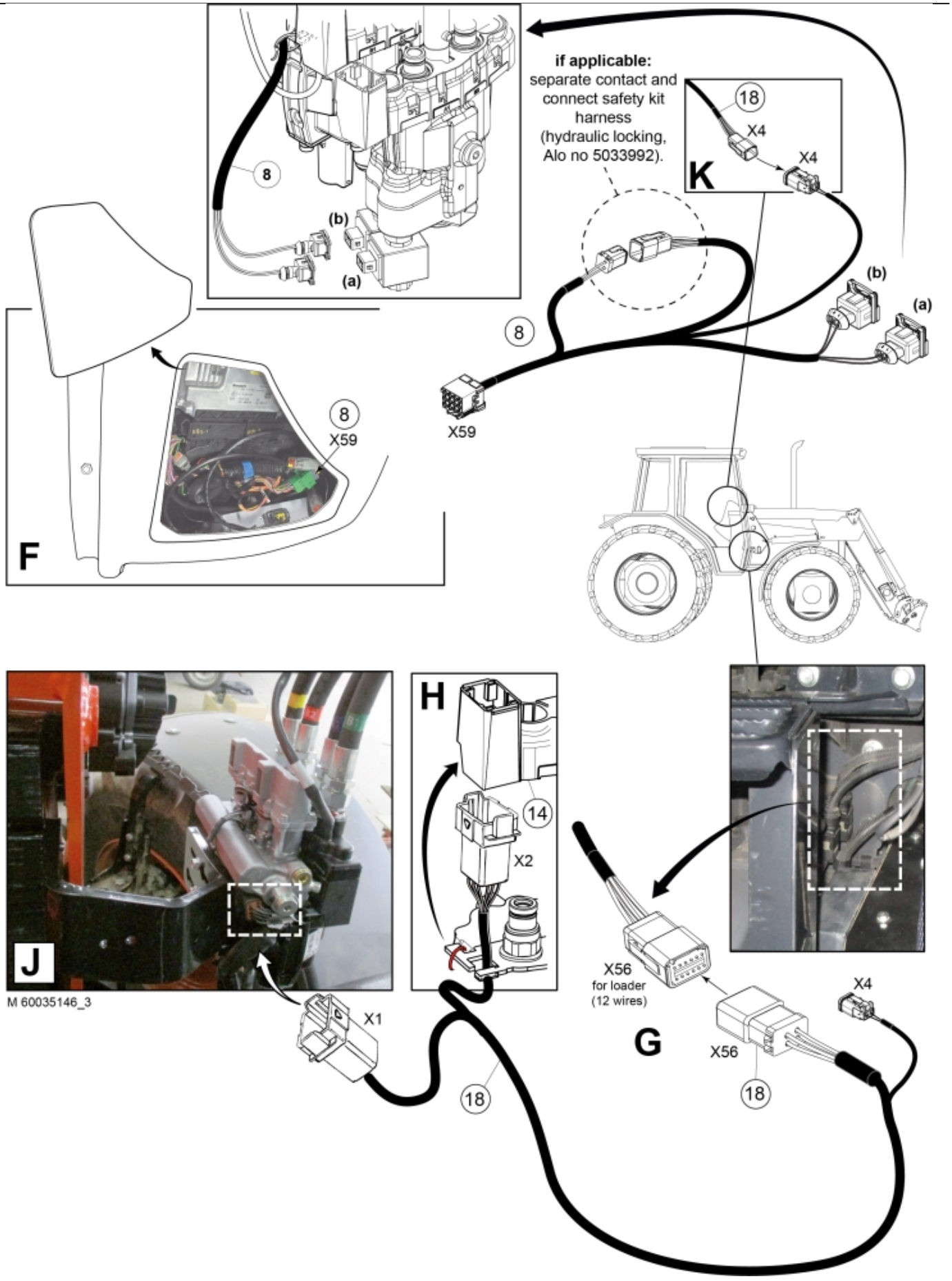
8
(b)
(a)
if applicable:
separate contact and connect safety kit harness (hydraulic locking, Alo no 5033992).
18
X4
X4
K
(b)
(a)
8
X59
8
X59
F
J
M 60035146_3
H
14
X2
X1
18
X56
for loader
(12 wires)
X4
X56
18
G

© 2025 Jost

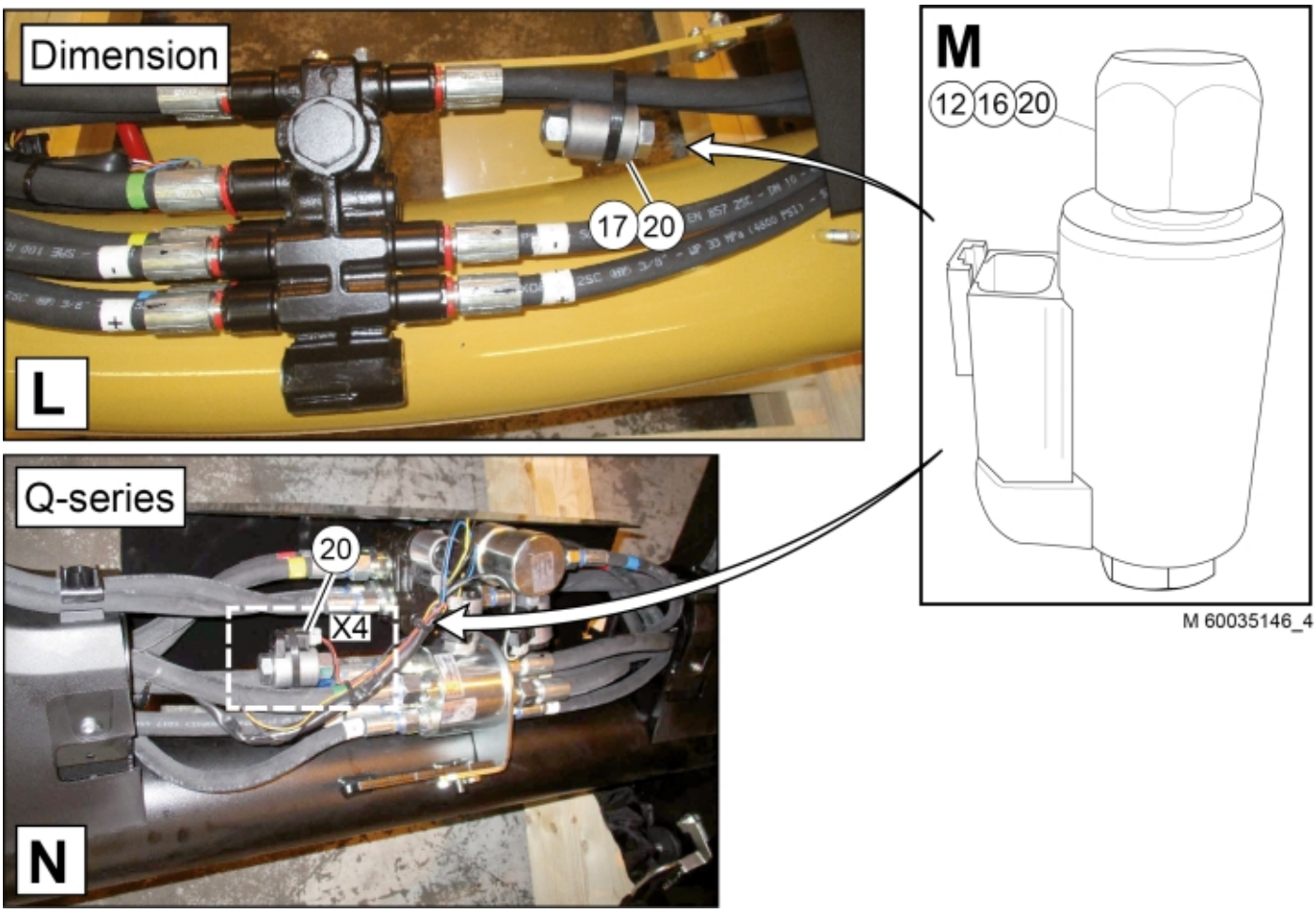

© 2025 Jost

Part assemblies Hydraulic kit

PartNo	Pos	Qty	Name	Specifications
60035146		1 PCS	Hydraulic kit	
5033621	2	4	Cable tie	4.6x150
60033562	8	1 PCS	Harness	
5004061	9	2	Screw	MC6S M8x20
5034234	10	1	Parking support kit	Replaces 5034233, 5033972
5034236	11	1 PCS	Bracket	Replaces 5033902
5011555	12	1	Nut	M12 Loc
10570171	13	1 PCS	Valve Live3 M. P. R LS/OC	
60012866	14	1 PCS	Control valve	
5002108	16	1	Screw	M6S M12x60
60023412	17	1	Cable	
60012853	18	1	Cable	
60024210	20	1 PCS	Solenoid	
60011836		1 PCS	Hydraulic connection	
10391712	21	1	• Valve bracket	
5005999	22	2	• Screw	M6SF M10X45
5050476	23	1 PCS	• Hose	3/4" L=1000 1 1/16 RLM - 1 3/16 45LM
5050477	24	1 PCS	• Hose	5/8" L=1000 1 1/16 RLM - 1 1/16 RLM
5050478	25	1 PCS	• Hose	1/4" L=1000 9/16 RLM - 9/16 RLM
5033606	26	4	• Cable tie	7,5 x 385
5033621	27	4	• Cable tie	4.6x150

© 2025 Jost