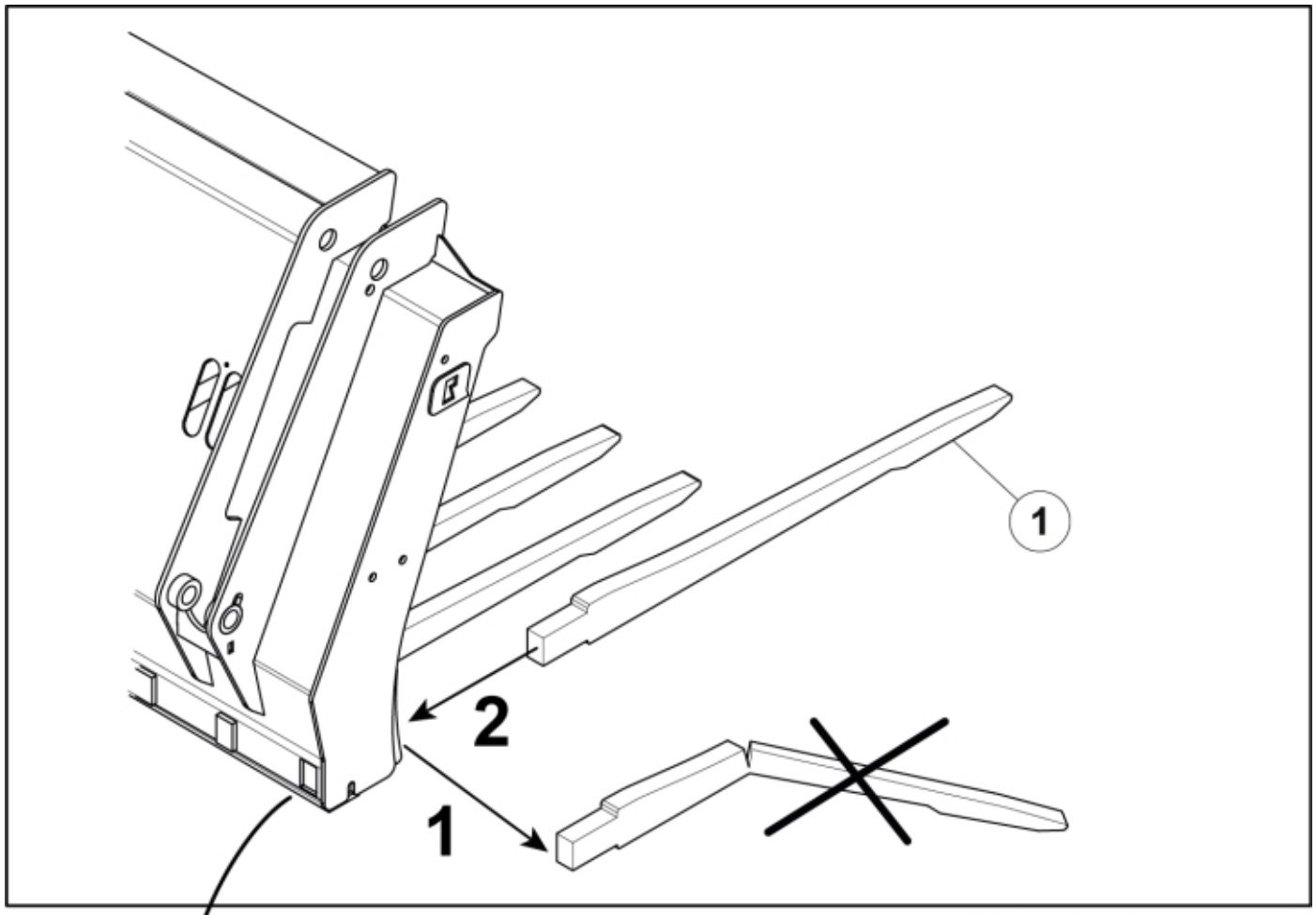

M 60034749_60034750

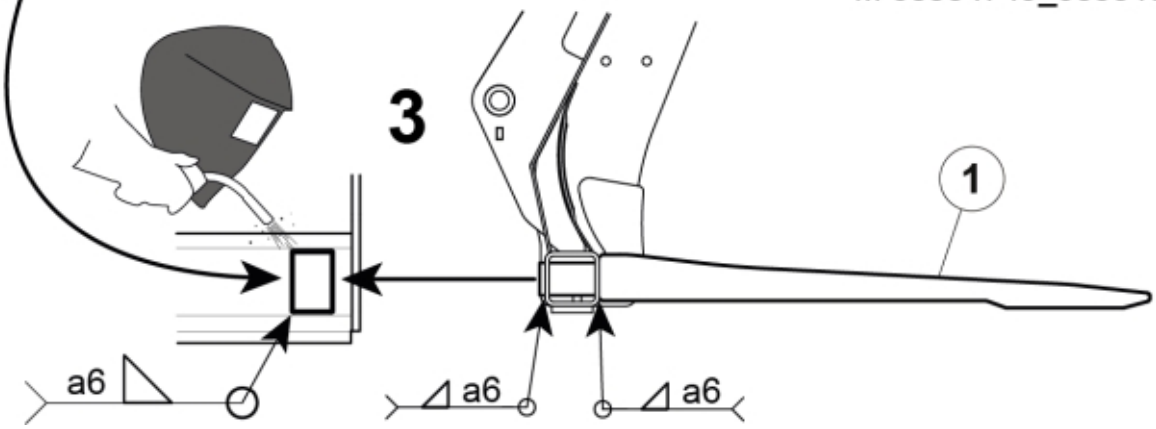

© 2025 Jost

Part assemblies Tine

PartNo	Pos	Qty	Name	Specifications
60034749	1	1	Tine	

© 2025 Jost