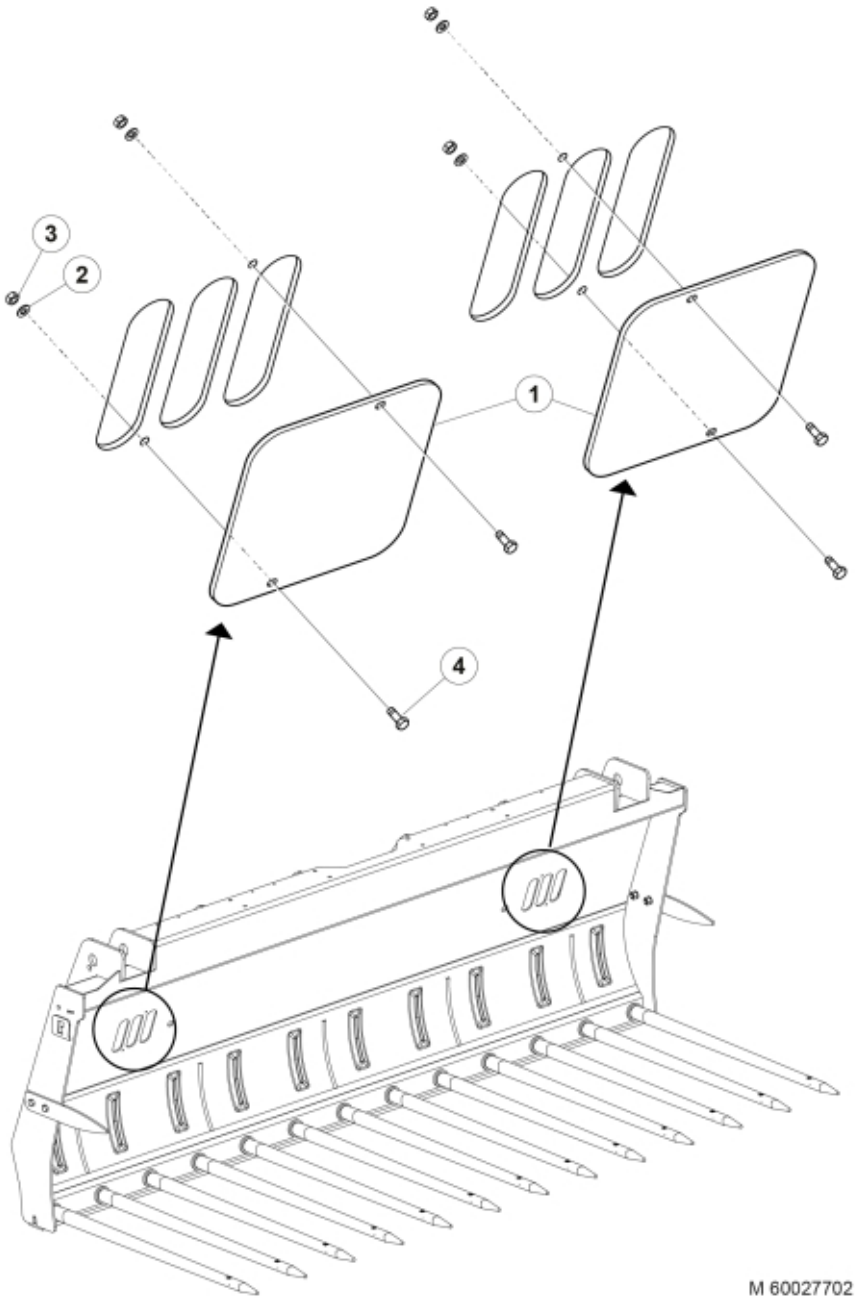

© 2025 Jost

Part assemblies	Cover kit

PartNo	Pos	Qty	Name	Specifications
60027702		1 PCS	Cover kit	
60027718	1	2 PCS	• Cover plate	
5013112	2	4	• Washer	5,3x10x1,5
5011051	3	4	• Nut	M6M 5
5002003	4	4	• Screw	M6S M5X14 (8.8)

© 2025 Jost