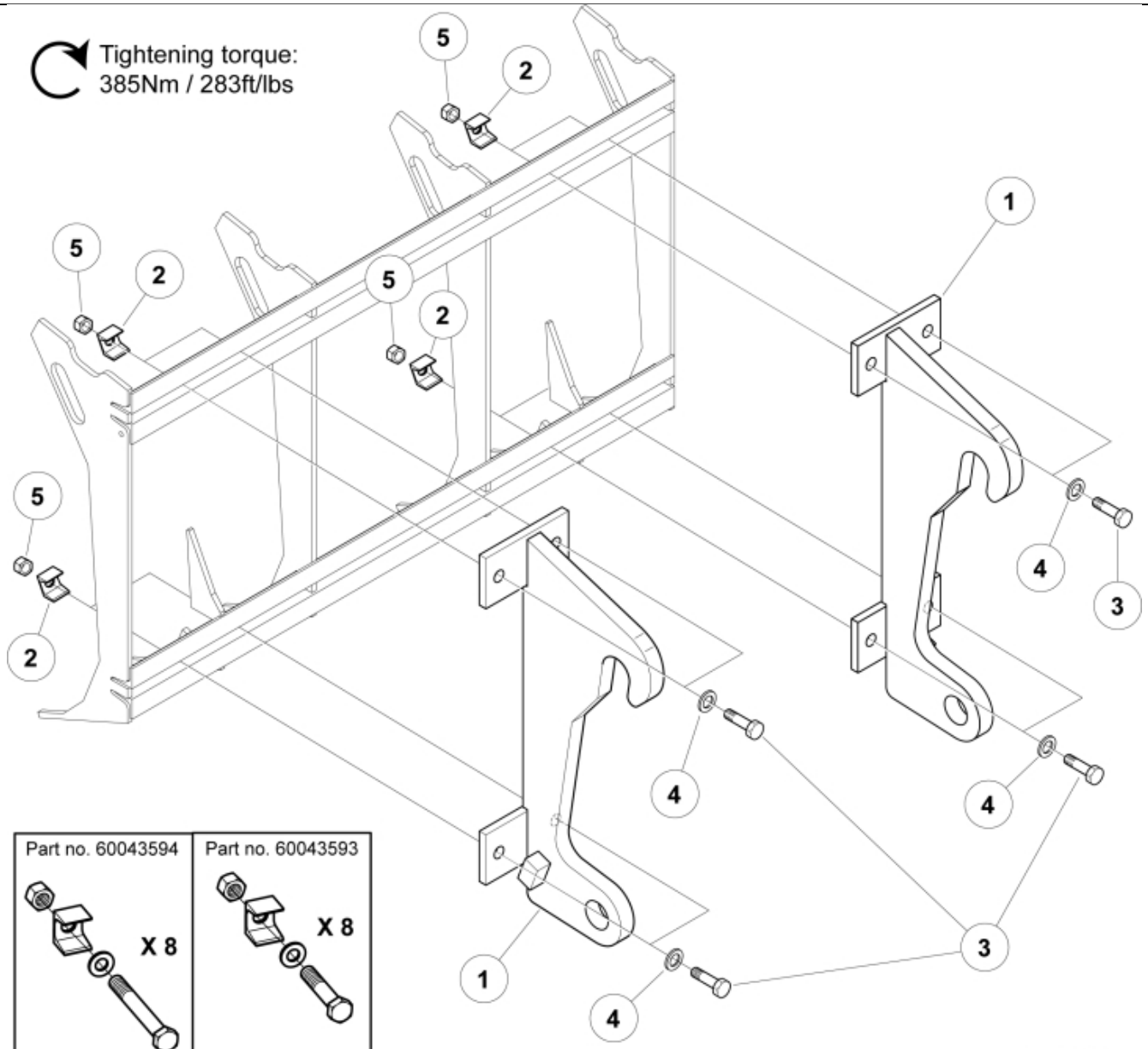
Tightening torque:
385Nm / 283ft/lbs
5
2
1
4
3
Part no. 60043594
X 8
Part no. 60043593
X 8
M 11255184

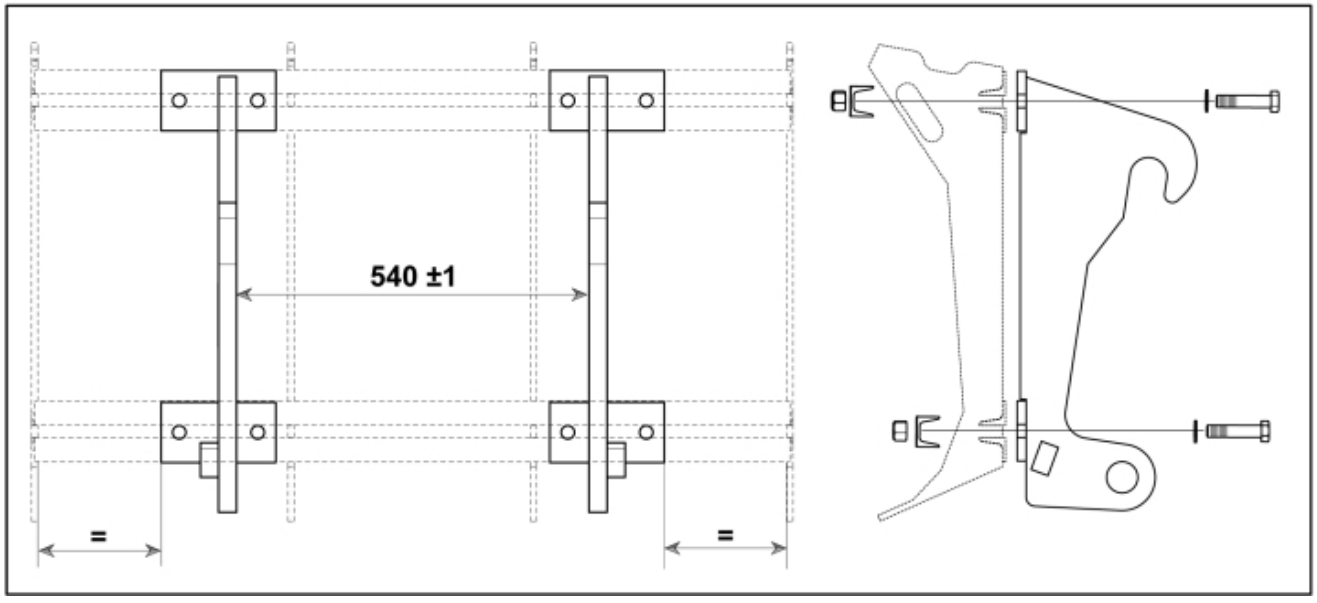
540 ±1
=
=

© 2025 Jost

Part assemblies Attachment kit CAT TH

PartNo	Pos	Qty	Name	Specifications
11255184		1	Attachment kit CAT TH	
60030197	1	1 PCS	Attachment CAT TH	Part is included in kit 11255184 Attachment kit CAT TH
60043593		1	• Screw kit	Q, Part is included in kit 11255098 Attachment kit Dieci Large, 11255234 Attachment kit Dieci Medium, 11255238 Attachment kit Dieci Small, 11255241 Attachment kit JLG Deutz, 11255233 Attachment kit Schäffer type SWH, 11255326 Attachment kit Weidemann, 11255184 Attachment kit CAT TH, 11255096 Attachment kit Merlo
60043157	2	8	•• Clamp	Part is included in kit 11255098 Attachment kit Dieci Large, 11255234 Attachment kit Dieci Medium, 11255238 Attachment kit Dieci Small, 11255241 Attachment kit JLG Deutz, 11255233 Attachment kit Schäffer type SWH, 11255326 Attachment kit Weidemann, 11255184 Attachment kit CAT TH, 11255096 Attachment kit Merlo, Part is included in kit 11255098 Attachment kit Dieci Large, 11255234 Attachment kit Dieci Medium, 11255238 Attachment kit Dieci Small, 11255241 Attachment kit JLG Deutz, 11255233 Attachment kit Schäffer type SWH, 11255326 Attachment kit Weidemann, 11255184 Attachment kit CAT TH, 11255096 Attachment kit Merlo
5050583	3	8	•• Screw	M6S M20x90, Part is included in kit 11255098 Attachment kit Dieci Large, 11255234 Attachment kit Dieci Medium, 11255238 Attachment kit Dieci Small, 11255241 Attachment kit JLG Deutz, 11255233 Attachment kit Schäffer type SWH, 11255326 Attachment kit Weidemann, 11255184 Attachment kit CAT TH, 11255096 Attachment kit Merlo
5013109	4	8	•• Washer	BRB 20 x 36 x 3, Part is included in kit 11255098 Attachment kit Dieci Large, 11255234 Attachment kit Dieci Medium, 11255238 Attachment kit Dieci Small, 11255241 Attachment kit JLG Deutz, 11255233 Attachment kit Schäffer type SWH, 11255326 Attachment kit Weidemann, 11255184 Attachment kit CAT TH, 11255096 Attachment kit Merlo, Part is included in kit 11255098 Attachment kit Dieci Large, 11255234 Attachment kit Dieci Medium, 11255238 Attachment kit Dieci Small, 11255241 Attachment kit JLG Deutz, 11255233 Attachment kit Schäffer type SWH, 11255326 Attachment kit Weidemann, 11255184 Attachment kit CAT TH, 11255096 Attachment kit Merlo

© 2025 Jost

5011559	5	8	•• Nut	Loc-king M20x2,5 (10), Part is included in kit 11255098 Attachment kit Dieci Large, 11255234 Attachment kit Dieci Medium, 11255238 Attachment kit Dieci Small, 11255241 Attachment kit JLG Deutz, 11255233 Attachment kit Schäffer type SWH, 11255326 Attachment kit Weidemann, 11255184 Attachment kit CAT TH, 11255096 Attachment kit Merlo, Part is included in kit 11255098 Attachment kit Dieci Large, 11255234 Attachment kit Dieci Medium, 11255238 Attachment kit Dieci Small, 11255241 Attachment kit JLG Deutz, 11255233 Attachment kit Schäffer type SWH, 11255326 Attachment kit Weidemann, 11255184 Attachment kit CAT TH, 11255096 Attachment kit Merlo
60043594		1	• Screw kit	A, Part is included in kit 11255098 Attachment kit Dieci Large, 11255234 Attachment kit Dieci Medium, 11255238 Attachment kit Dieci Small, 11255241 Attachment kit JLG Deutz, 11255233 Attachment kit Schäffer type SWH, 11255326 Attachment kit Weidemann, 11255184 Attachment kit CAT TH, 11255096 Attachment kit Merlo
60043157	2	8	•• Clamp	Part is included in kit 11255098 Attachment kit Dieci Large, 11255234 Attachment kit Dieci Medium, 11255238 Attachment kit Dieci Small, 11255241 Attachment kit JLG Deutz, 11255233 Attachment kit Schäffer type SWH, 11255326 Attachment kit Weidemann, 11255184 Attachment kit CAT TH, 11255096 Attachment kit Merlo, Part is included in kit 11255098 Attachment kit Dieci Large, 11255234 Attachment kit Dieci Medium, 11255238 Attachment kit Dieci Small, 11255241 Attachment kit JLG Deutz, 11255233 Attachment kit Schäffer type SWH, 11255326 Attachment kit Weidemann, 11255184 Attachment kit CAT TH, 11255096 Attachment kit Merlo
5051726	3	8	•• Screw	M6S M20x125, Part is included in kit 11255098 Attachment kit Dieci Large, 11255234 Attachment kit Dieci Medium, 11255238 Attachment kit Dieci Small, 11255241 Attachment kit JLG Deutz, 11255233 Attachment kit Schäffer type SWH, 11255326 Attachment kit Weidemann, 11255184 Attachment kit CAT TH, 11255096 Attachment kit Merlo

© 2025 Jost

5013109	4	8	•• Washer	BRB 20 x 36 x 3, Part is included in kit 11255098 Attachment kit Dieci Large, 11255234 Attachment kit Dieci Medium, 11255238 Attachment kit Dieci Small, 11255241 Attachment kit JLG Deutz, 11255233 Attachment kit Schäffer type SWH, 11255326 Attachment kit Weidemann, 11255184 Attachment kit CAT TH, 11255096 Attachment kit Merlo, Part is included in kit 11255098 Attachment kit Dieci Large, 11255234 Attachment kit Dieci Medium, 11255238 Attachment kit Dieci Small, 11255241 Attachment kit JLG Deutz, 11255233 Attachment kit Schäffer type SWH, 11255326 Attachment kit Weidemann, 11255184 Attachment kit CAT TH, 11255096 Attachment kit Merlo
5011559	5	8	•• Nut	Loc-king M20x2,5 (10), Part is included in kit 11255098 Attachment kit Dieci Large, 11255234 Attachment kit Dieci Medium, 11255238 Attachment kit Dieci Small, 11255241 Attachment kit JLG Deutz, 11255233 Attachment kit Schäffer type SWH, 11255326 Attachment kit Weidemann, 11255184 Attachment kit CAT TH, 11255096 Attachment kit Merlo, Part is included in kit 11255098 Attachment kit Dieci Large, 11255234 Attachment kit Dieci Medium, 11255238 Attachment kit Dieci Small, 11255241 Attachment kit JLG Deutz, 11255233 Attachment kit Schäffer type SWH, 11255326 Attachment kit Weidemann, 11255184 Attachment kit CAT TH, 11255096 Attachment kit Merlo

© 2025 Jost