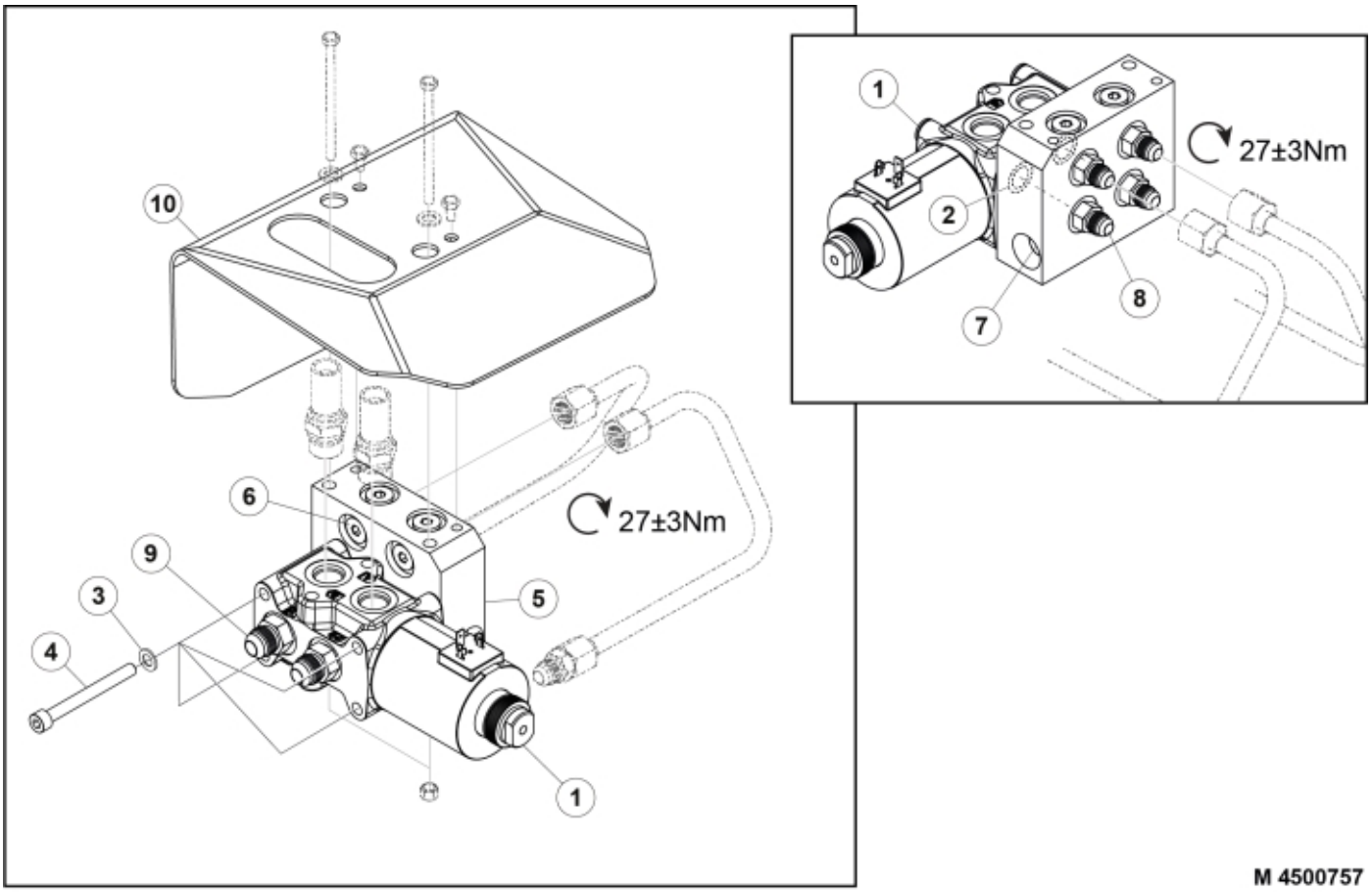

M 4500757

© 2025 Jost

Part assemblies Specification		Control valve Specification: Replaces 5221389		
PartNo	**Pos**	**Qty**	**Name**	**Specifications**
4500757			Control valve	Replaces 5221389
60010211		1	• Control valve	
60009542	1	1	•• Valve assy.	Roquet
5050388	2	2	•• O-ring	Ø25 0,7x2,62
5013101	3	4	•• Washer	BRB 8,4 x 16
5004054	4	4	•• Screw	MC6S M8x80
60009550	5	1	•• Valve block	
5028121	6	4	•• Plug	UNF 9/16
60010115	7	2	•• Pressure relief valve	
5028118	8	4	• Adapter short cpl.	9/16" UNF JIC
5028078	9	2	• Adaptor	3/4" ORB -3/4" JIC
60009571	10	1	• Protection plate	Replaces 5221270

© 2025 Jost