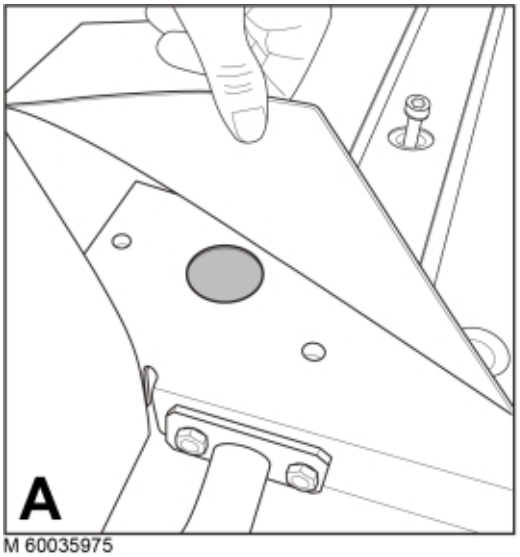

M 60035975

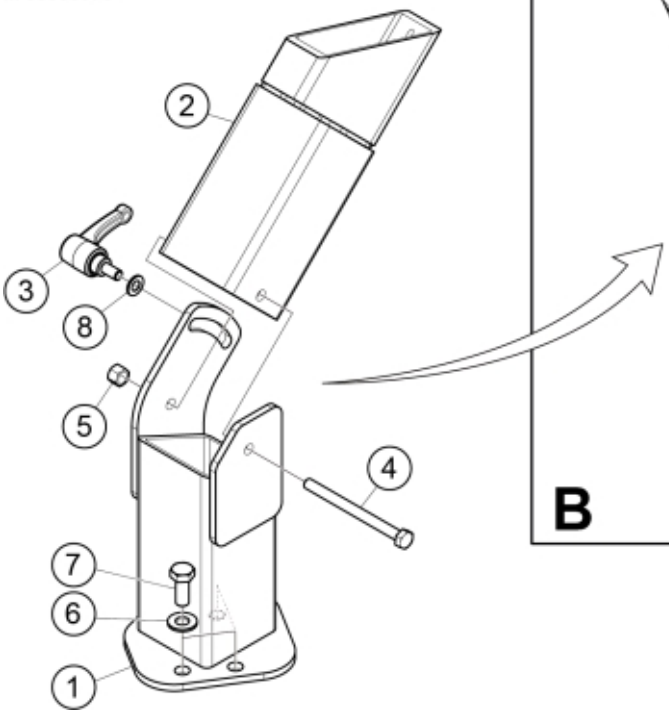

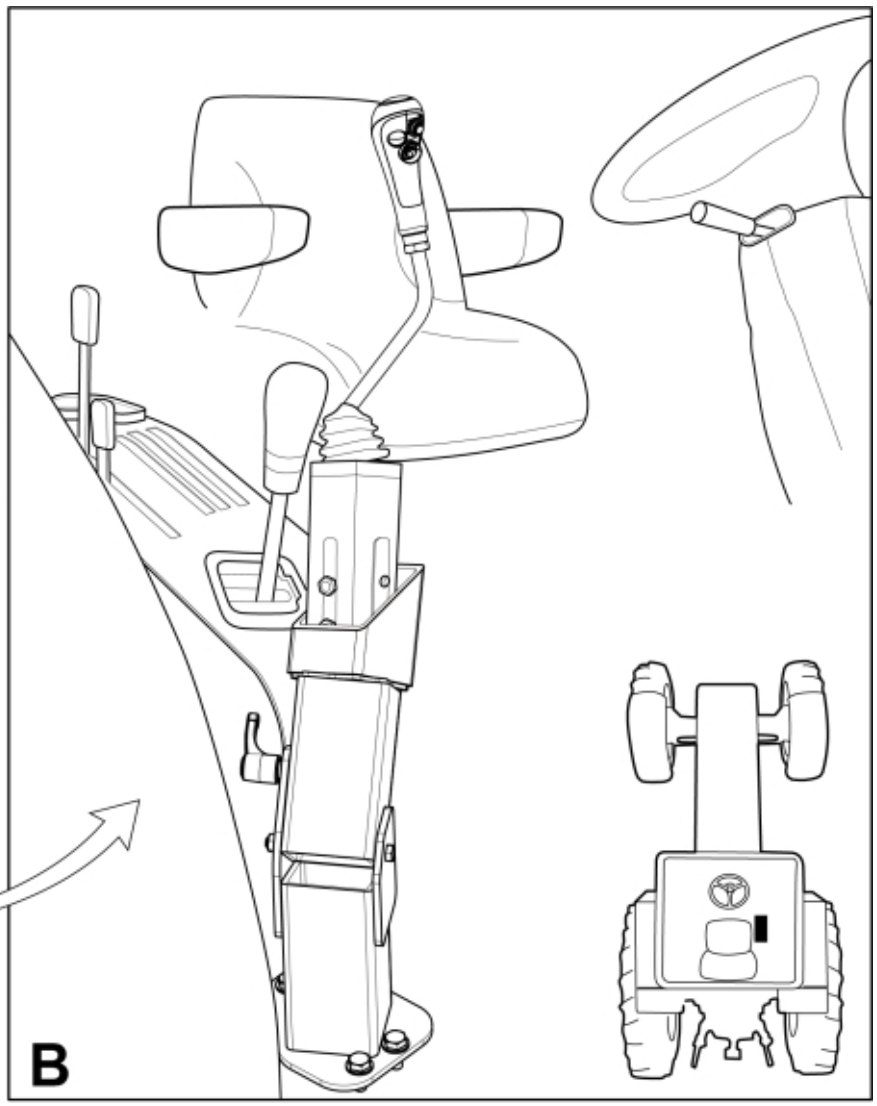

© 2025 Jost

Part assemblies Joystick bracket

PartNo	Pos	Qty	Name	Specifications
60035975		1 PCS	Joystick bracket	
60034960	1	1 PCS	Bracket	
60034974	2	1 PCS	Bracket	
5022132	3	1	Handle	
5002063	4	1	Screw	M6S 8x100
5011553	5	1	Nut	M6M M8 Loc-king
5013110	6	3	Washer	BRB 10.5x22x2
5002923	7	3 PCS	Screw	M6S M10 x 1,25 x 25 (8.8)
5013101	8	1	Washer	BRB 8,4 x 16

© 2025 Jost