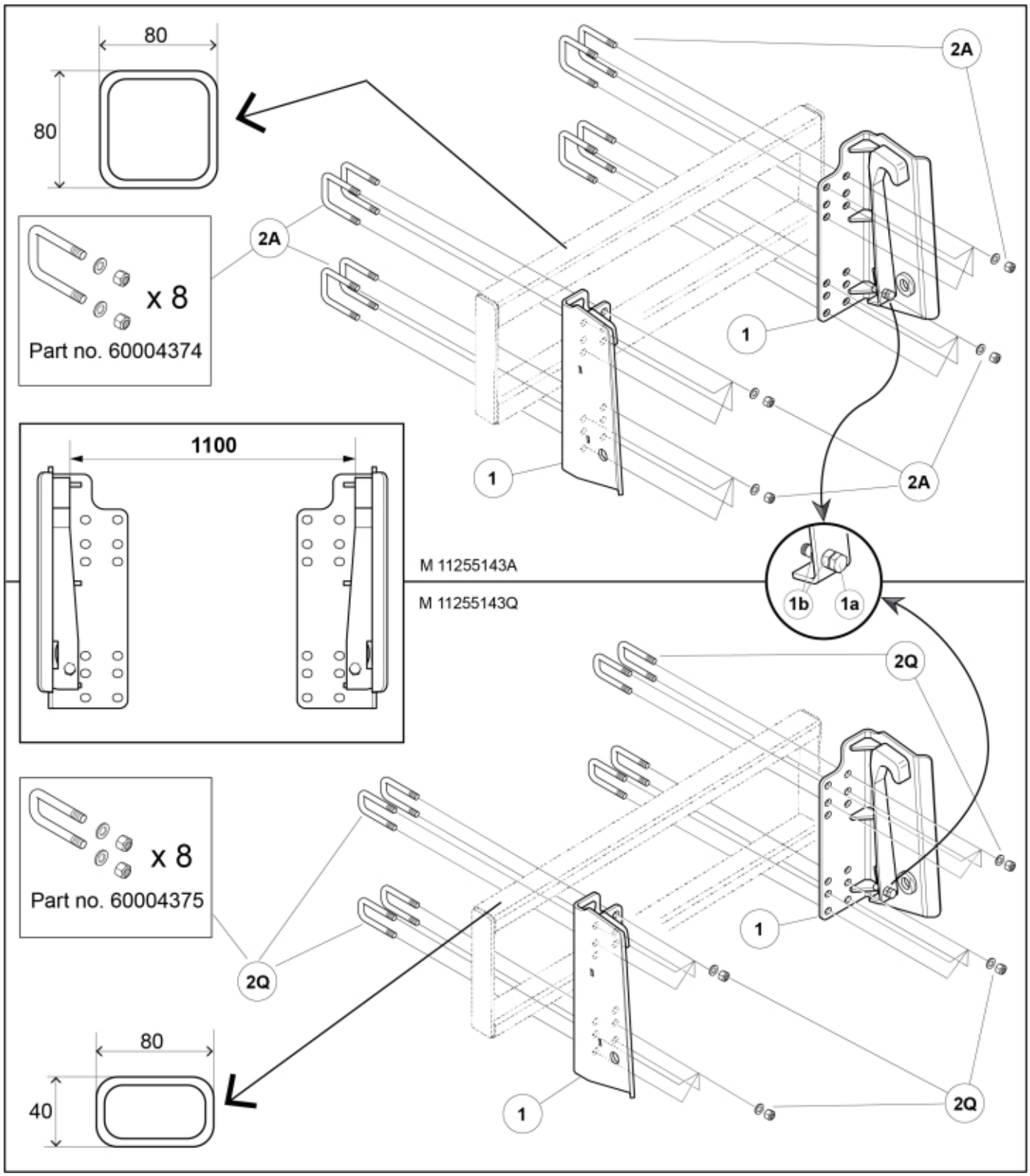
80
80
x 8
Part no. 60004374
2A
1
2A
1
2A
1100
M 11255143A
M 11255143Q
1b
1a
2Q
1
2Q
x 8
Part no. 60004375
2Q
80
40
1
2Q

© 2025 Jost

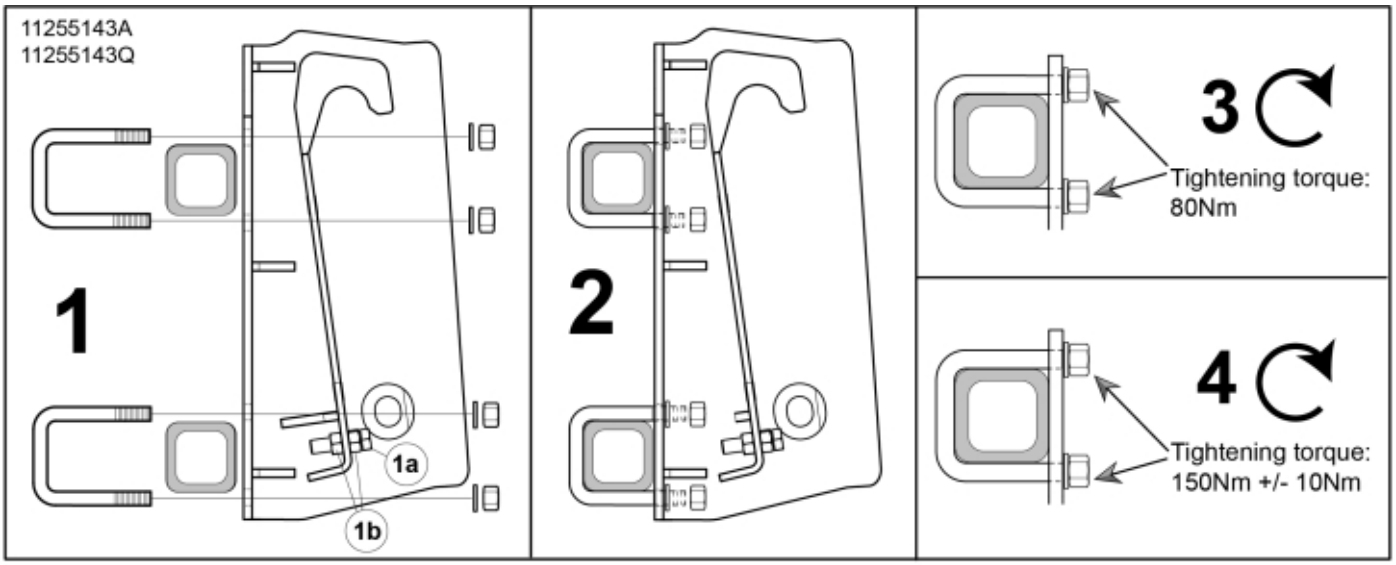
11255143A
11255143Q
1
1a
1b
2
3
Tightening torque:
80Nm
4
Tightening torque:
150Nm +/- 10Nm

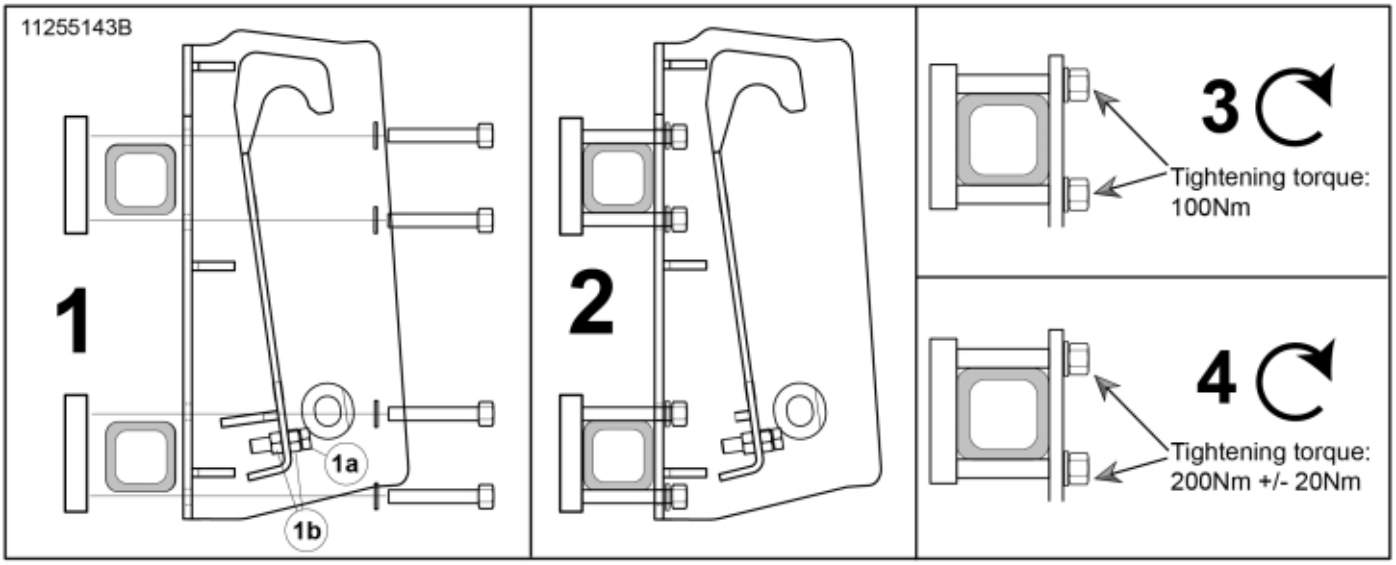
11255143B
1
1a
1b
2
3
Tightening torque:
100Nm
4
Tightening torque:
200Nm +/- 20Nm

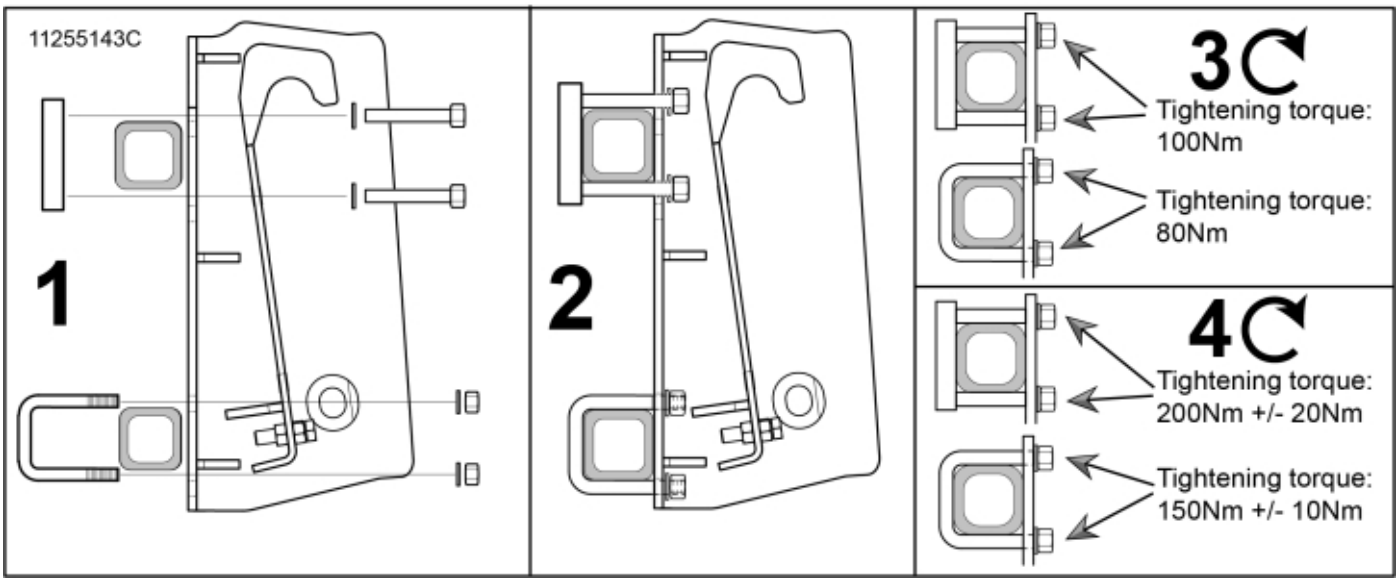
11255143C
1
2
3
Tightening torque:
100Nm
Tightening torque:
80Nm
4
Tightening torque:
200Nm +/- 20Nm
Tightening torque:
150Nm +/- 10Nm

© 2025 Jost

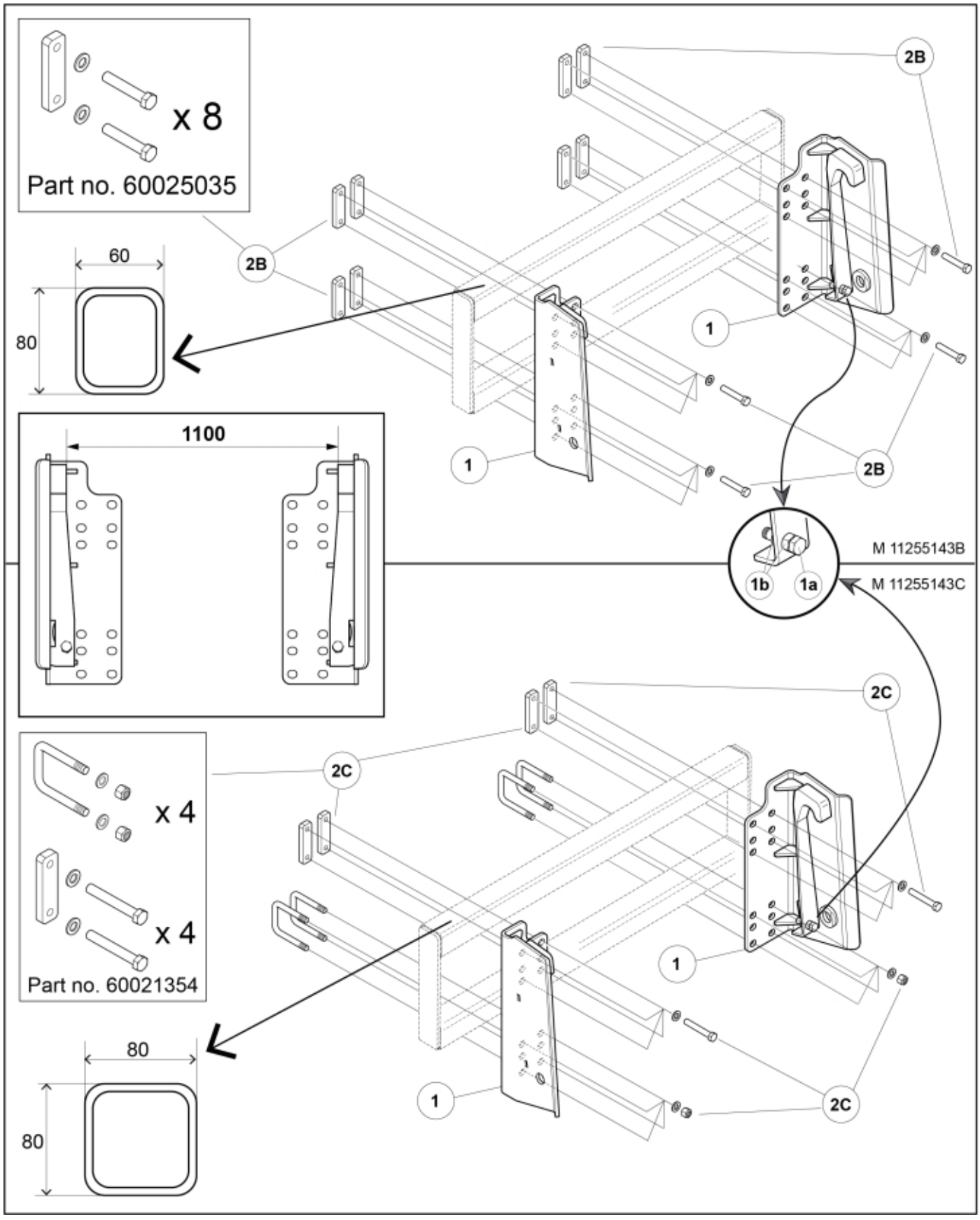
x 8
Part no. 60025035
60
80
2B
1
1100
M 11255143B
1b
1a
M 11255143C
2C
x 4
x 4
Part no. 60021354
80
80

© 2025 Jost

Part assemblies Attachment kit Hauer

PartNo	Pos	Qty	Name	Specifications
60029562	1	1 PCS	Attachment Hauer	
5002757	1a	2 PCS	Screw	M6S_ M16 x 1,5 x 60 (8.8)
5050249	1b	4 PCS	Nut	M16x1,5
60004374	2A	1 PCS	Bolt kit	
60020469		8	• U-bolt	80x80 M16 (60003288)
5013105		16	• Washer	BRB 17 x 30 x 3 300HV
5011557		16	• Nut	Loc-King M16
60004375	2Q	1 PCS	Bolt kit	
60020468		8 PCS	• U-bolt	80x40 M16 (60003289)
5013105		16	• Washer	BRB 17 x 30 x 3 300HV
5011557		16	• Nut	Loc-King M16
60025035	2B	1 PCS	Bolt kit	
60050544		8 PCS	• Plate	
5050888		16	• Screw	M6S M16x90 10.9
5013105		16	• Washer	BRB 17 x 30 x 3 300HV
60021354	2C	1 PCS	Bolt kit	
60050544		4 PCS	• Plate	
5050810		8	• Screw	M6S M16x120
5013105		16	• Washer	BRB 17 x 30 x 3 300HV
60020469		4	• U-bolt	80x80 M16 (60003288)
5011557		8	• Nut	Loc-King M16

© 2025 Jost