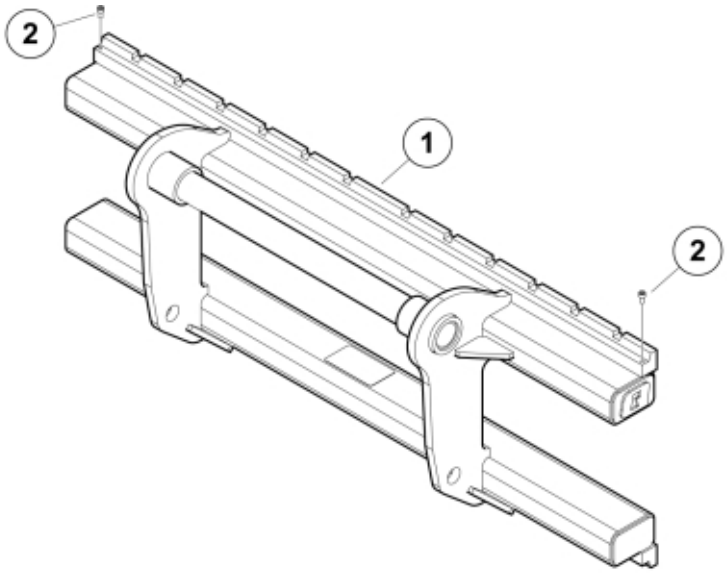


M 11255212

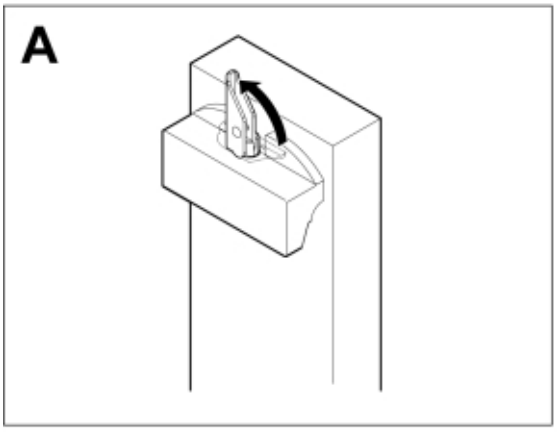


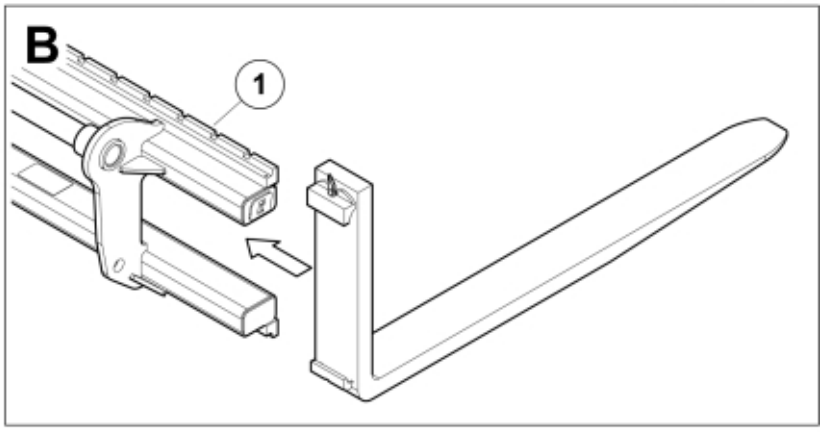


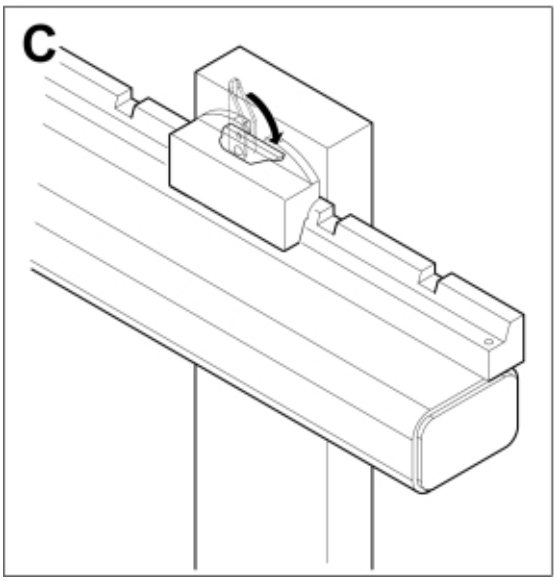


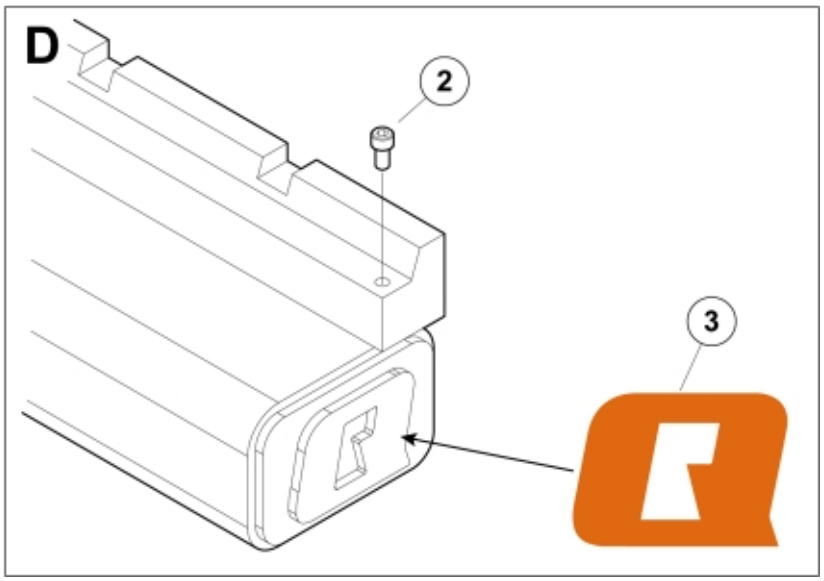



© 2025 Jost

| | |
|---|---|
| **Part assemblies** | Pallet fork L 1200 - Manitou MLT |
| **Specification** | Year From: 1/1/2013 12:00:00 AM |

| PartNo | Pos | Qty | Name | Specifications |
|---|---|---|---|---|
| 11255200 | 1 | 1 | Pallet fork L 1200 - Manitou MLT | 1/1/2013 12:00:00 AM |
| 5004919 | 2 | 2 | • Screw | MC6S M8x16 |
| 60056626 | 3 | 2 | • Decal | |


© 2025 Jost