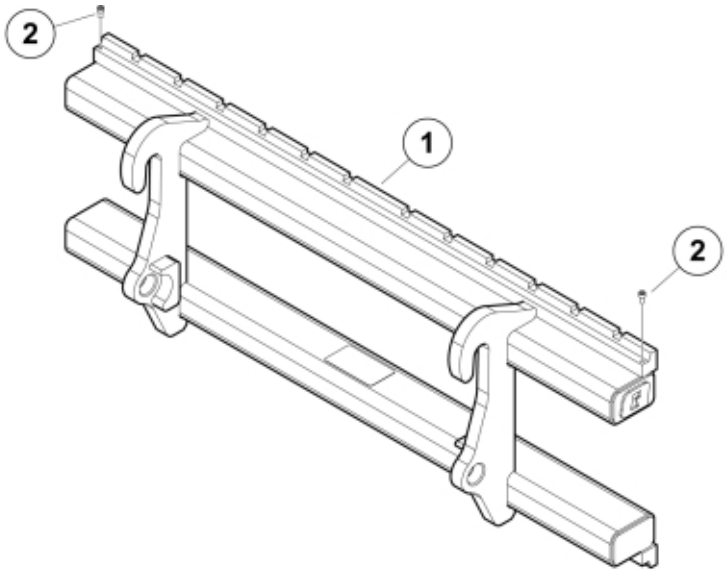

M 11255213

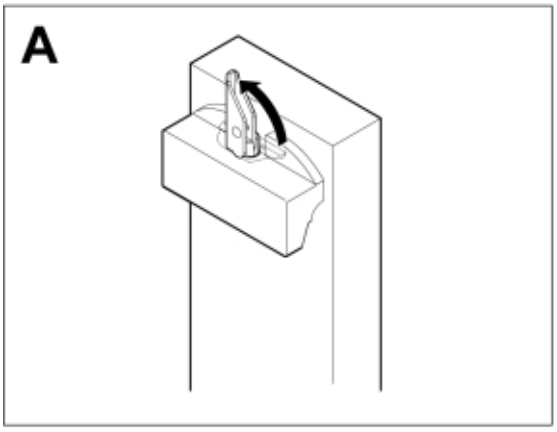

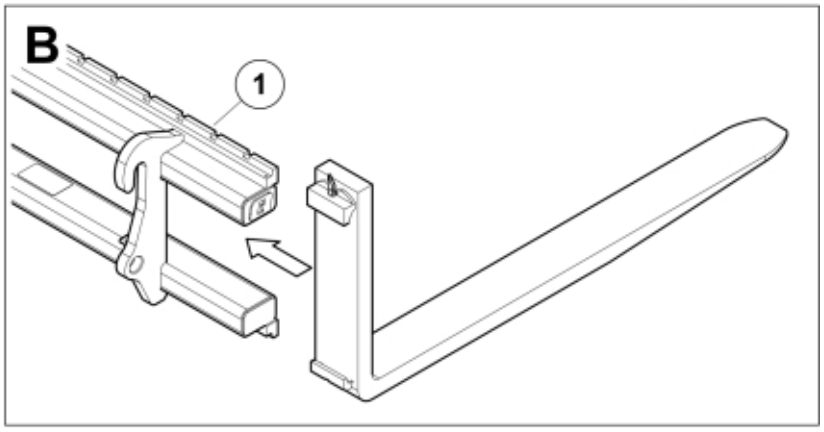

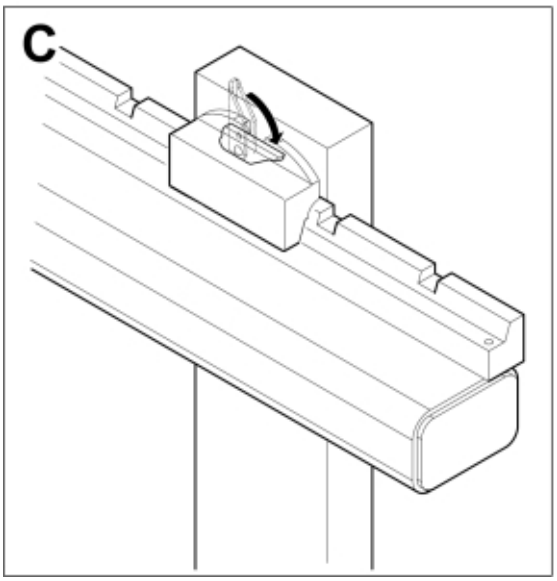

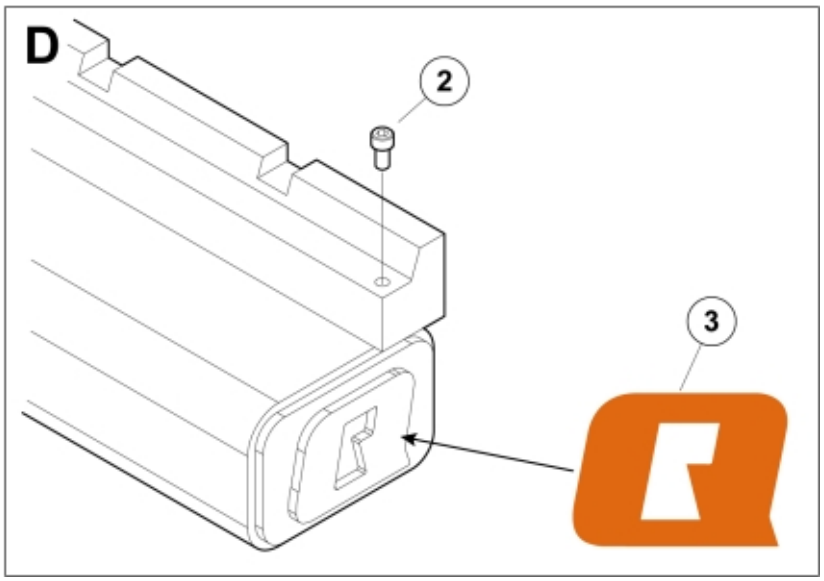

© 2025 Jost

Part assemblies	Pallet fork L 1200 - Schäffer HD
Specification	Year From: 1/1/2013 12:00:00 AM

PartNo	Pos	Qty	Name	Specifications
11255201	1	1	Pallet fork L 1200 - Schäffer HD	1/1/2013 12:00:00 AM
5004919	2	2	• Screw	MC6S M8x16
60056626	3	2	• Decal	

© 2025 Jost