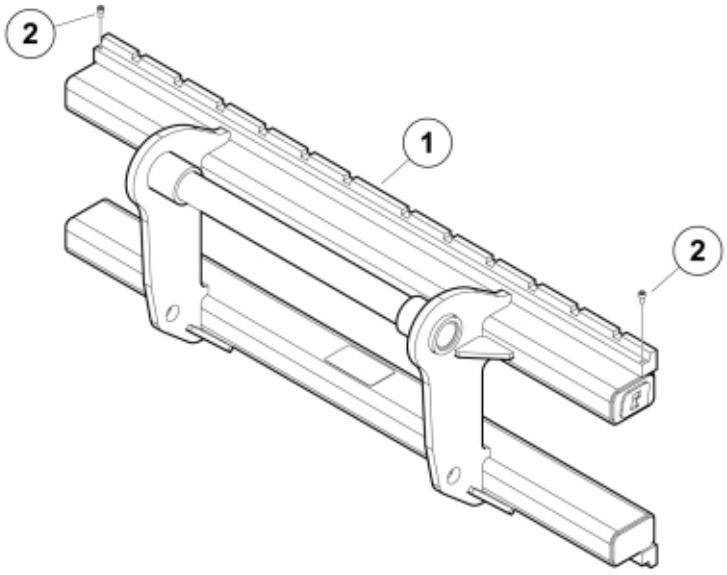

M 11255212

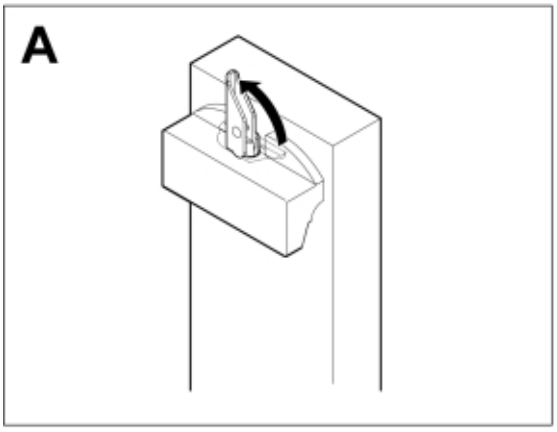

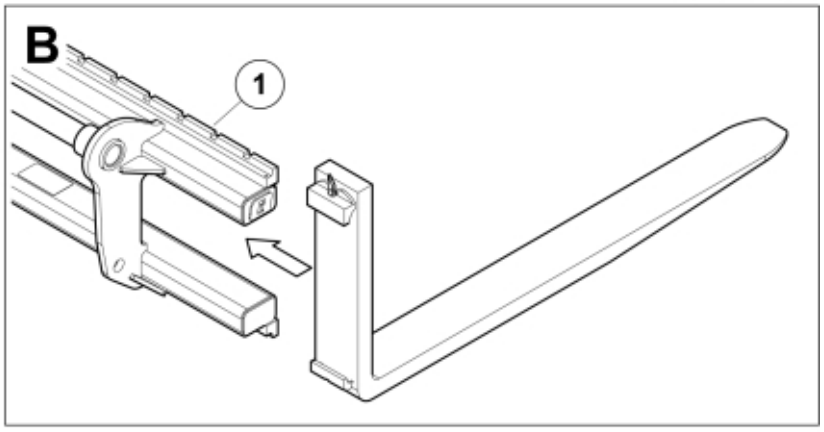

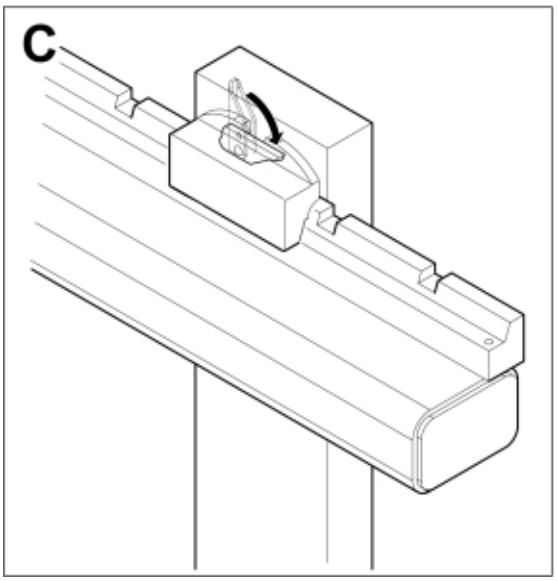

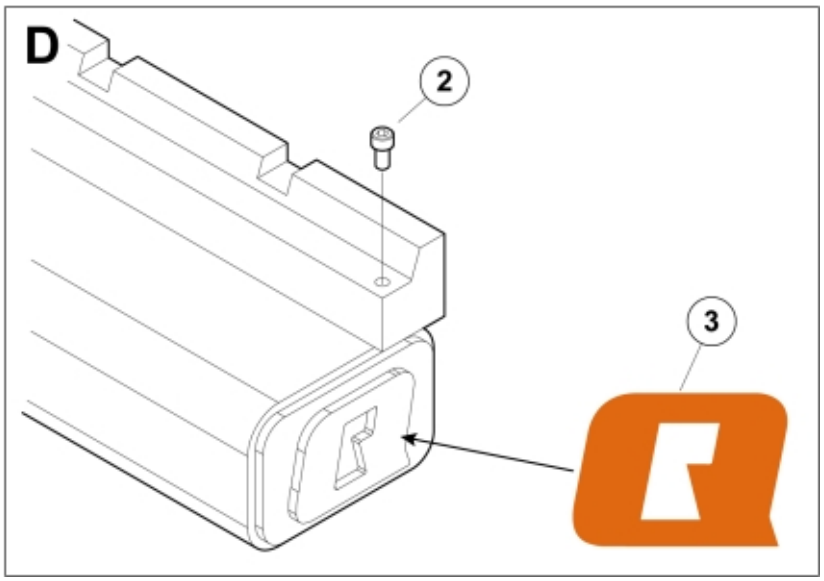

© 2025 Jost

Part assemblies	Pallet fork XL 2000 - Manitou MLT
Specification	Year From: 1/1/2013 12:00:00 AM
	Year To: 8/31/2022 12:00:00 AM

PartNo	Pos	Qty	Name	Specifications
11255218	1	1	Pallet fork XL 2000 - Manitou MLT	1/1/2013 12:00:00 AM, 8/31/2022 12:00:00 AM
5004933	2	2	• Screw	MC6S M12 x 20 (8.8)
60056626	3	2	• Decal	

© 2025 Jost