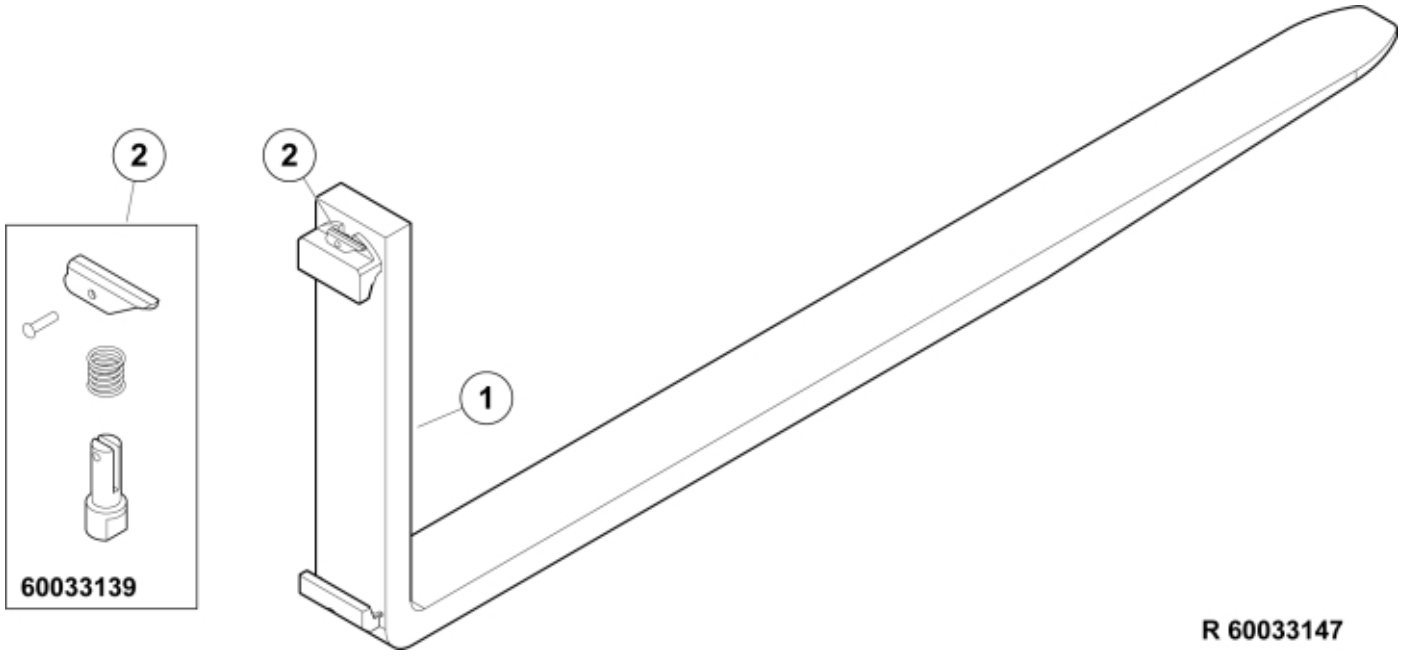

© 2025 Jost

Description	L=1800 3,5t
Part assemblies	Fork
Specification	Specification: L=1800 3,5t

PartNo	Pos	Qty	Name	Specifications
60033147	1	1 PCS	Fork	L=1800 3,5t
60033139	2	1	• Locking mechanism	

© 2025 Jost