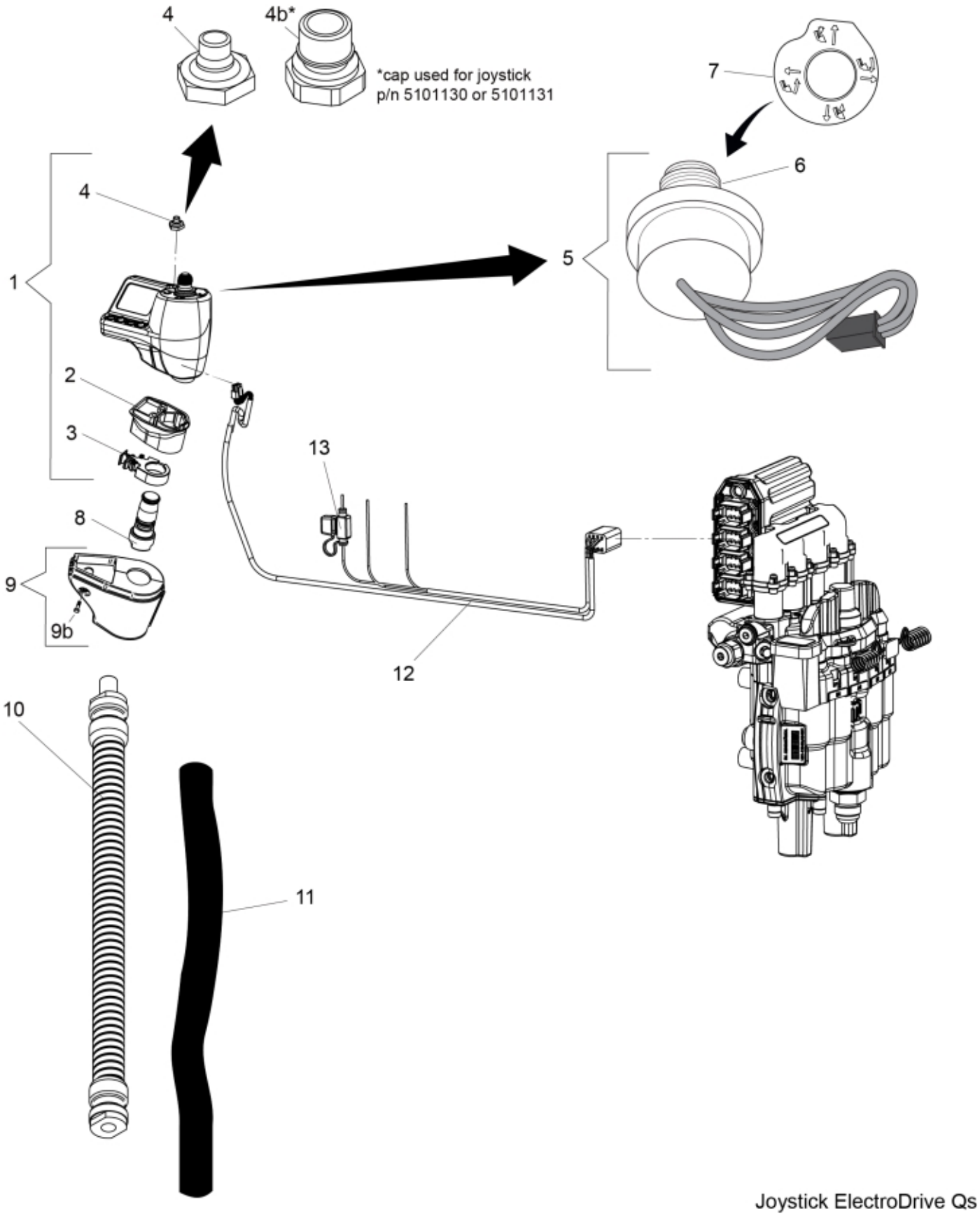


Joystick ElectroDrive Qs


© 2025 Jost

**Part assemblies** Joystick ElectroDrive Qs

| PartNo | Pos | Qty | Name | Specifications |
|---|---|---|---|---|
| 4501087 | 1 | 1 | Joystick ElectroDrive Qs | Replaces 60006437/60006439., - Note! Electrojoystick LCS replacement kit PN 4501279 is NOT compatible with loaders equipped with Live3 option (independent 3rd service). Please contact Quicke. |
| 5103086 | 2 | 1 | • Bellows | |
| 5103087 | 3 | 1 | • Cable protection | |
| 60006414 | 4 | 1 | • Cap | |
| 5103100 | 4b | 1 | Cap | Use for joysticks manufactured before 2015 (p/n 5101130/5101131. Replaces 5103088 |
| 4501268 | 5 | 1 | • Thumb joystick | Boot included. Replaces 5103116 |
| 4501267 | 6 | 1 | •• Rubber boot | Replaces 60004085. |
| 5103118 | 7 | 1 | • Decal | |
| 5103055 | 8 | 1 | Pole clp. | |
| 5103056 | 9 | 1 | Cover | |
| 5006015 | 9b | 1 | • Screw | Torx T8x12 |
| 5103058 | 10 | 1 | Gooseneck | 150mm |
| 5103057 | 10 | 1 | Gooseneck | 300mm |
| 5103083 | 10 | 1 | Gooseneck | 350mm |
| 5103053 | 11 | 1 | Braided sleeving | |
| 5102118 | 12 | 1 | Cable cpl. | |
| 5103089 | 13 | 1 | Mini fuse 15A | |


© 2025 Jost