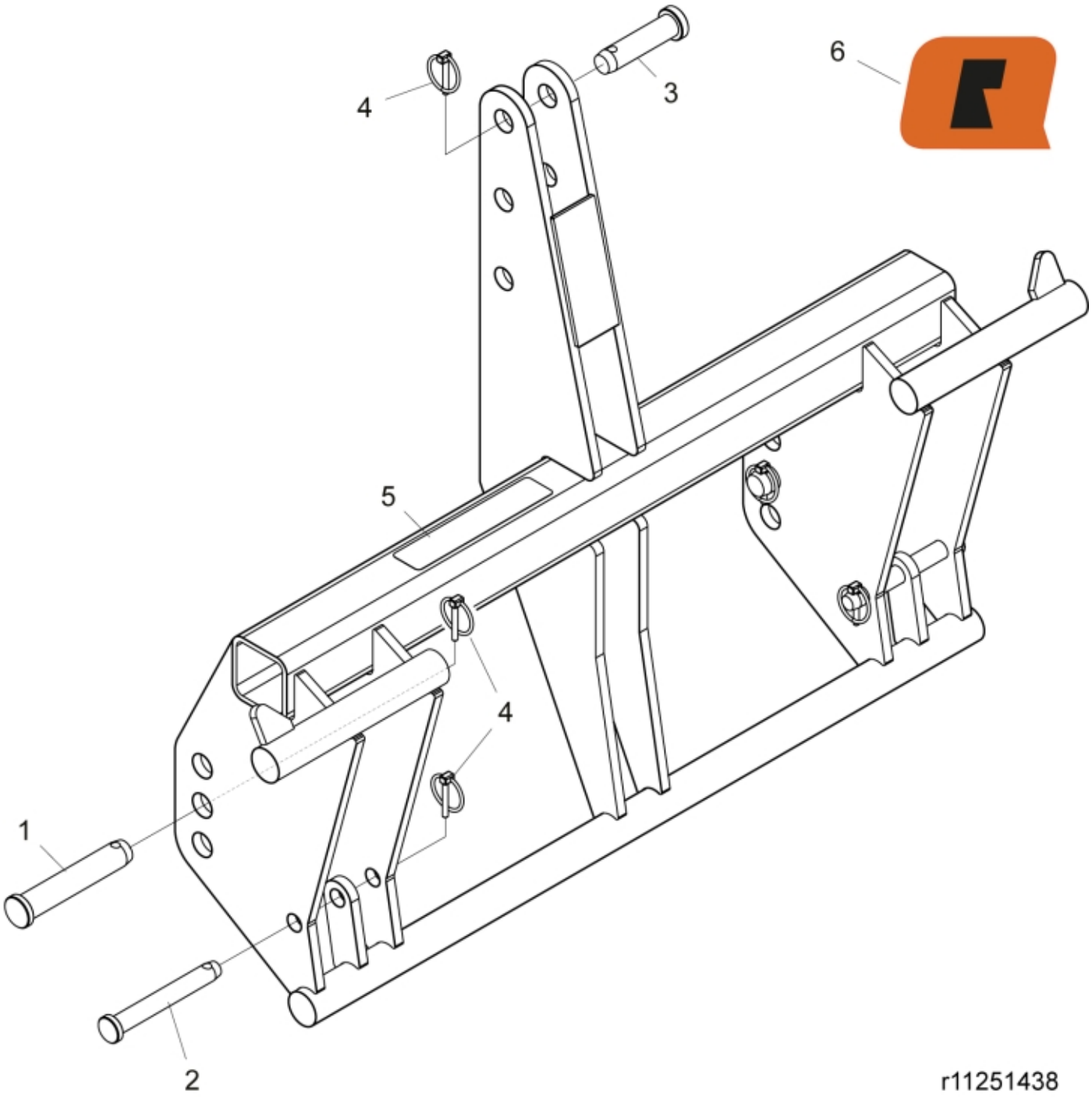

© 2025 Jost

Description	Euro
Part assemblies	3 Point Linkage

PartNo	Pos	Qty	Name	Specifications
11251438		1	3 Point Linkage	for 3 point lift, cat. 2/3N
20525702	1	2	• Pin	525702
20525703	2	2	• Latch Bolt	525703
20525677	3	1	• Pin	525677
20725101	4	5	• Linch pin	
60018512	5	1 PCS	Warning decal	Max 1500 kg
11251438	6	2	3 Point Linkage	

© 2025 Jost