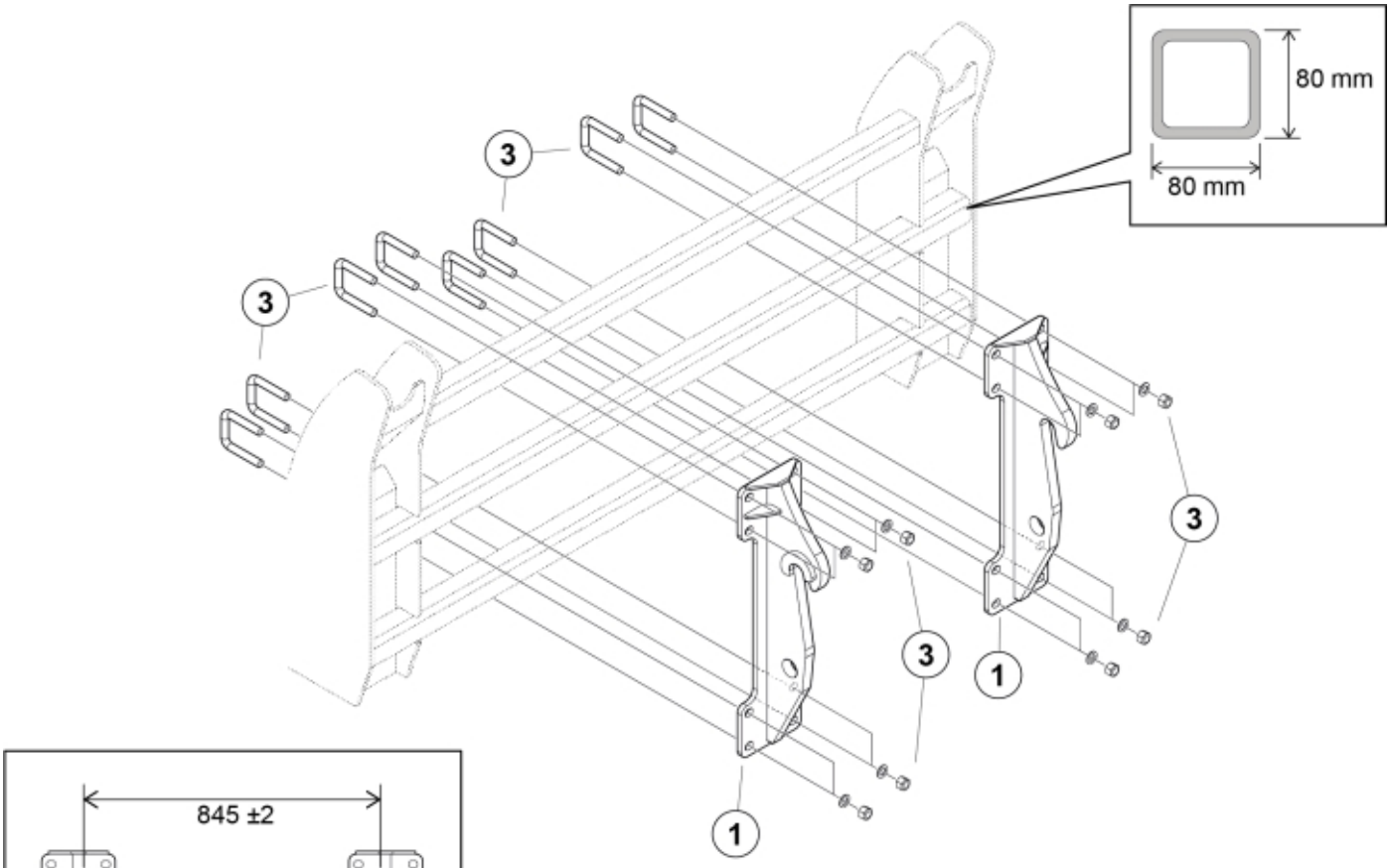

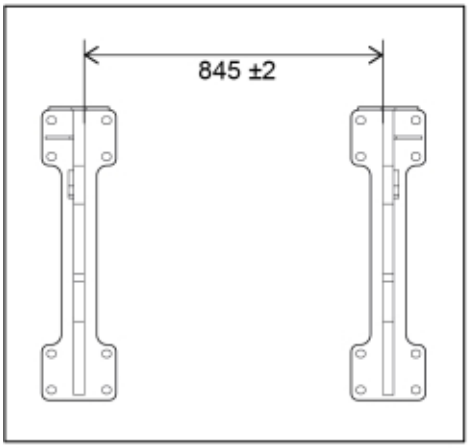

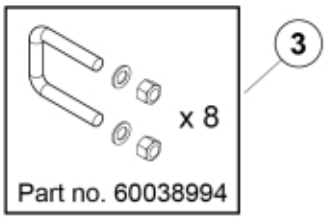

M 11255322

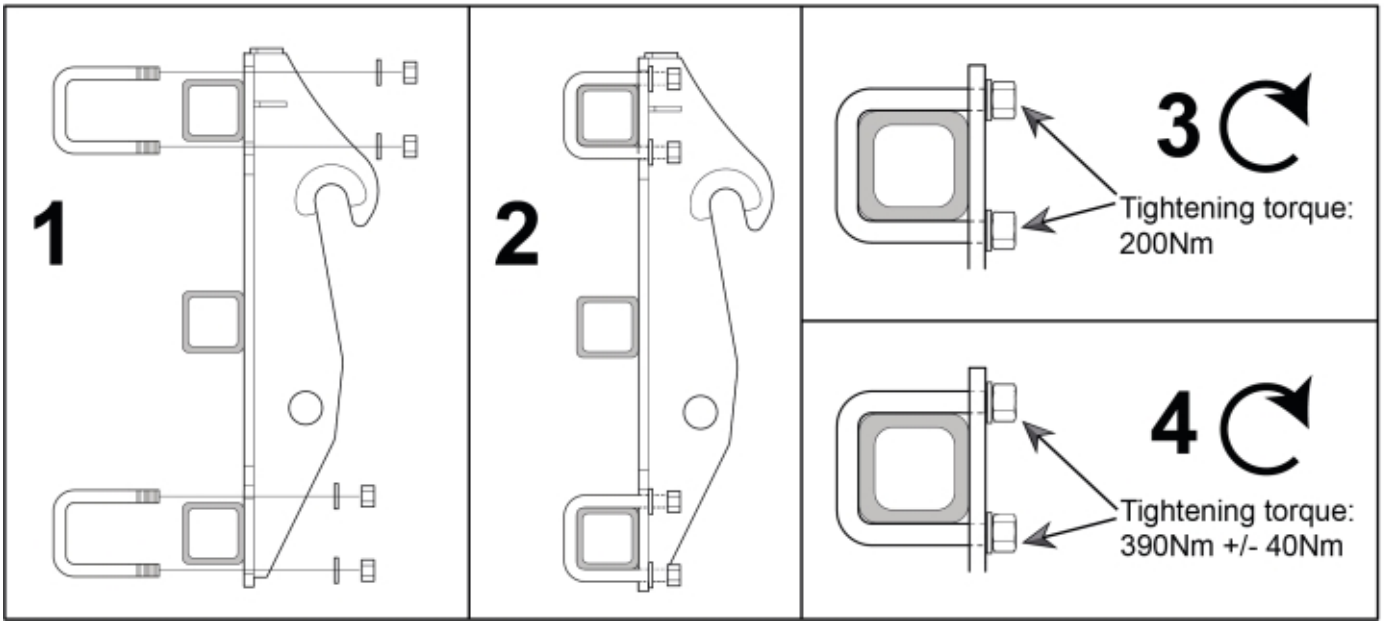

© 2025 Jost

Part assemblies Attachment kit Weidemann

PartNo	Pos	Qty	Name	Specifications
11255322		1	Attachment kit Weidemann	
60037140	1	1 PCS	Attachment Weidemann	80x80 XL Weidemann
60038994	3	1 PCS	Screw kit	
60038995		8 PCS	• U-bolt	M20 80x80, Replaces 60029556
5013127		16	• Washer	BRB 21 x 36 x 3, Part is included in kit 11255096 Attachment kit Merlo
5011559		16	• Nut	Loc-king M20x2,5 (10), Part is included in kit 11255098 Attachment kit Dieci Large, 11255234 Attachment kit Dieci Medium, 11255238 Attachment kit Dieci Small, 11255241 Attachment kit JLG Deutz, 11255233 Attachment kit Schäffer type SWH, 11255326 Attachment kit Weidemann, 11255184 Attachment kit CAT TH, 11255096 Attachment kit Merlo

© 2025 Jost