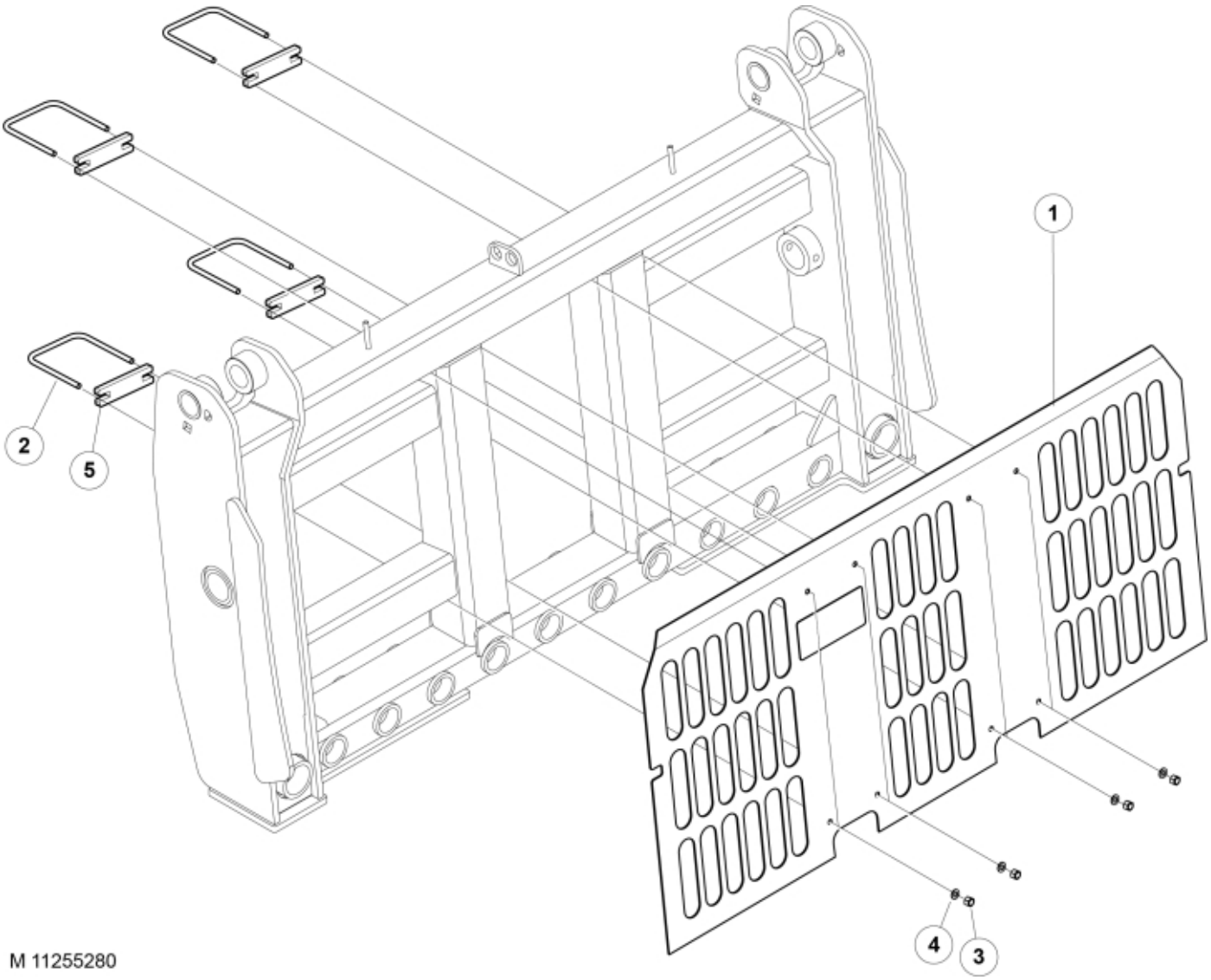

M 11255280

© 2025 Jost

Description	150
Part assemblies	Cover kit

PartNo	Pos	Qty	Name	Specifications
11255280			Cover kit	
60035597	1	1 PCS	Cover	150
60019382	2	4 PCS	U-bolt	
5011553	3	8	Nut	M6M M8 Loc-king
5013101	4	8	Washer	BRB 8,4 x 16
60035646	5	4 PCS	Plate	

© 2025 Jost