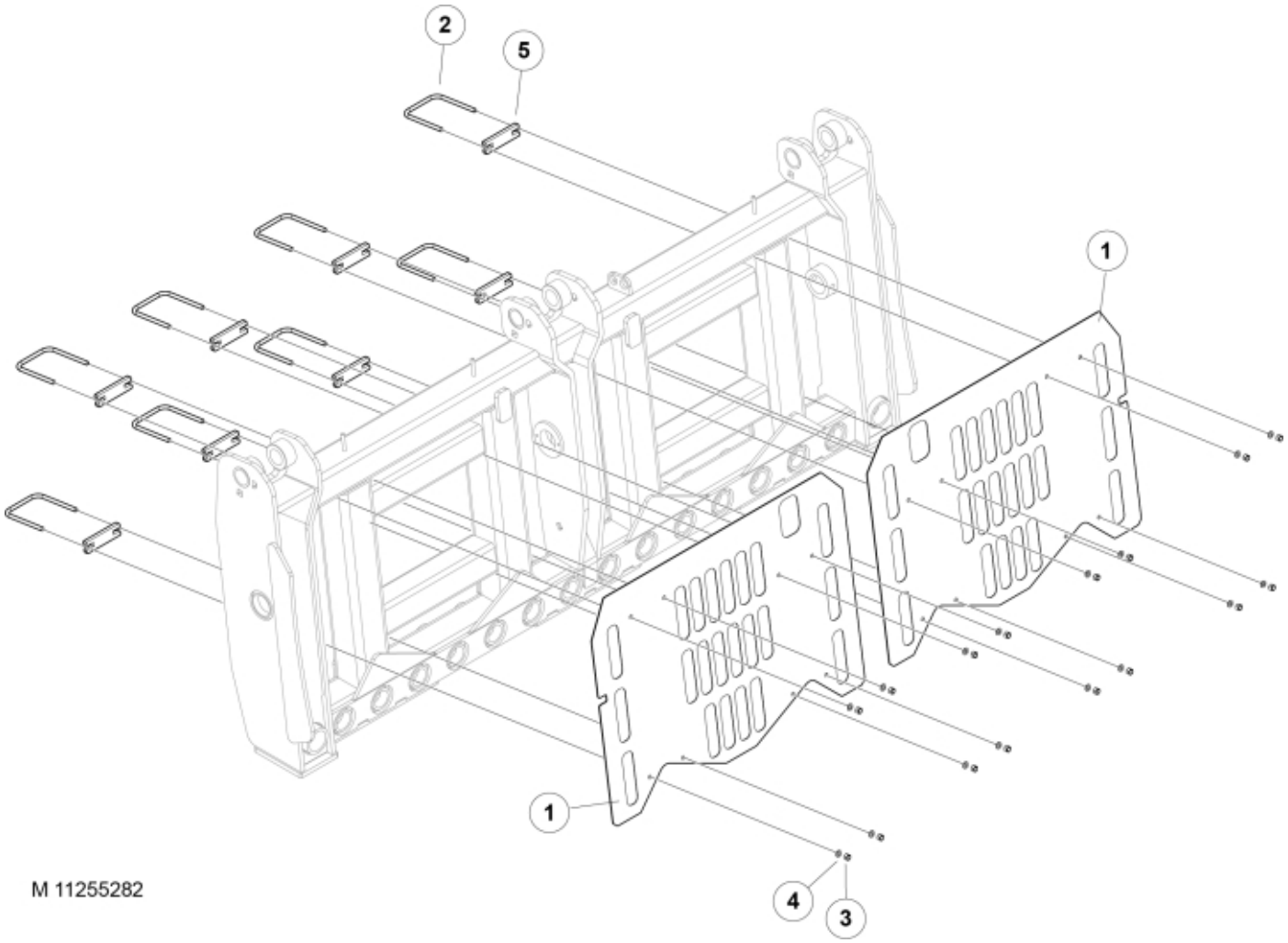

M 11255282

© 2025 Jost

Description	200
Part assemblies	Cover kit

PartNo	Pos	Qty	Name	Specifications
11255282			Cover kit	
60035615	1	2 PCS	Cover LH	200
60019382	2	8 PCS	U-bolt	
5011553	3	16	Nut	M6M M8 Loc-king
5013101	4	16	Washer	BRB 8,4 x 16
60035646	5	8 PCS	Plate	

© 2025 Jost