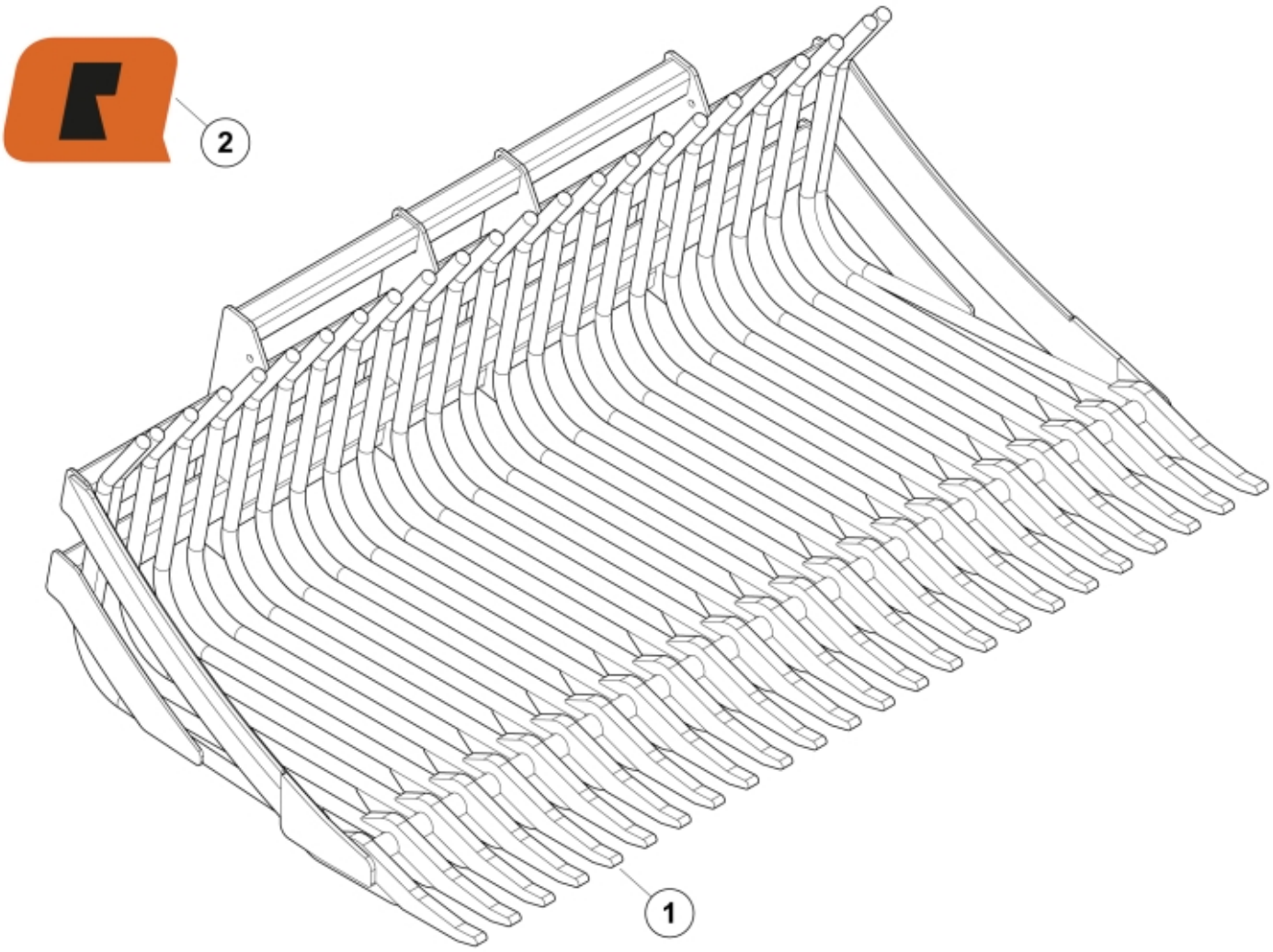

© 2025 Jost

Part assemblies	Stone fork XL 280 BoH
Specification	Year From: 3/1/2019 12:00:00 AM

PartNo	Pos	Qty	Name	Specifications
11255321		1	Stone fork XL 280 BoH	3/1/2019 12:00:00 AM
60022824	1	24	Tooth	
60049053	2	2	Decal	"Q" small 80x57

© 2025 Jost