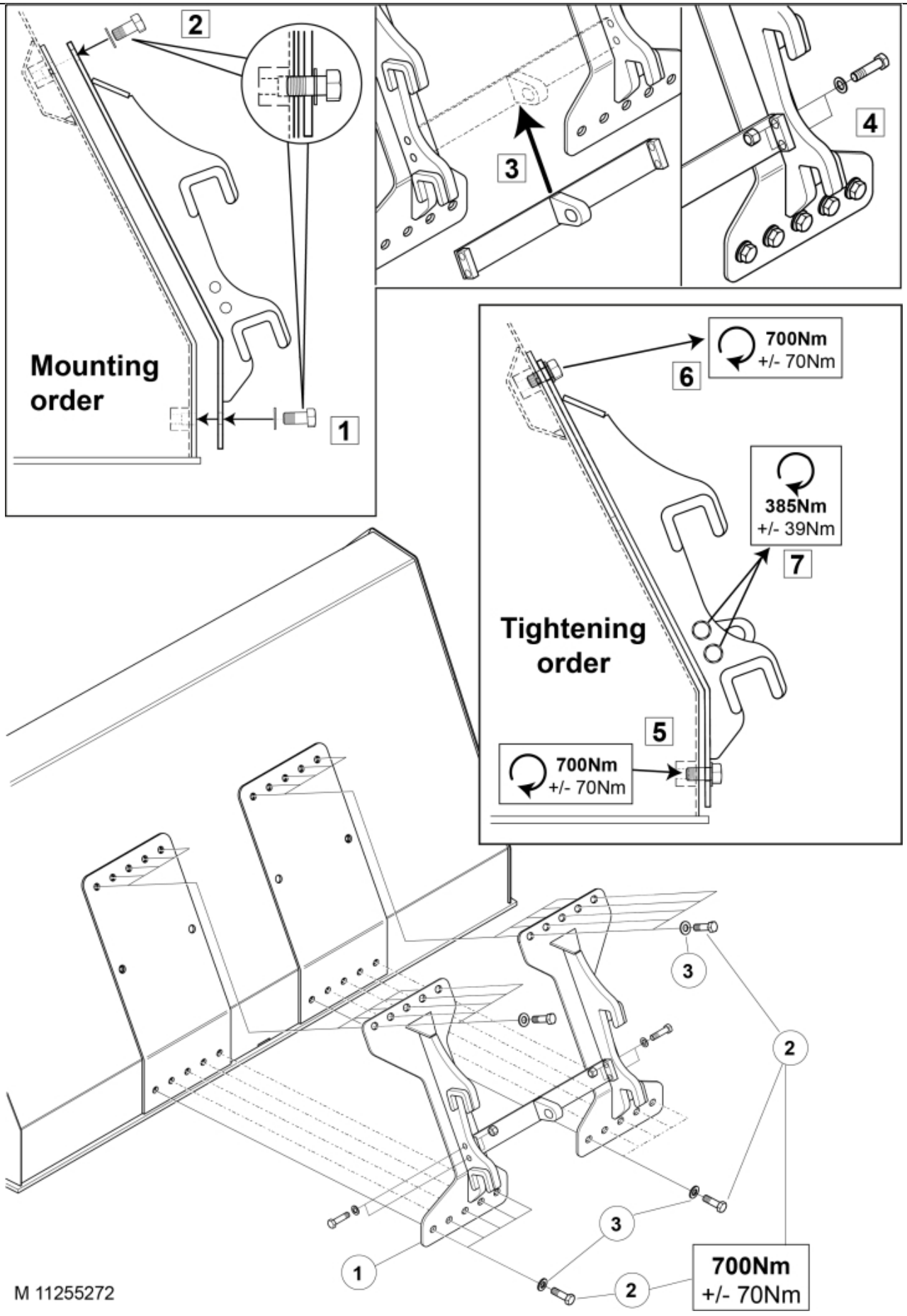
2
3
4
Mounting order
1
700Nm
+/- 70Nm
6
385Nm
+/- 39Nm
7
Tightening order
5
700Nm
+/- 70Nm
3
2
3
1
2
700Nm
+/- 70Nm
M 11255272

© 2025 Jost

Part assemblies Attachment kit Schäffer Square

PartNo	Pos	Qty	Name	Specifications
11255272		1	Attachment kit Schäffer Square	
60031051	1	1	Attachment Schäffer Square	
60029905		1	Screw kit	
5051392	2	20	• Screw	M6S 24X75 (8.8)
5051393	3	20	• Washer	M24 Broad Wedge-Lock

© 2025 Jost