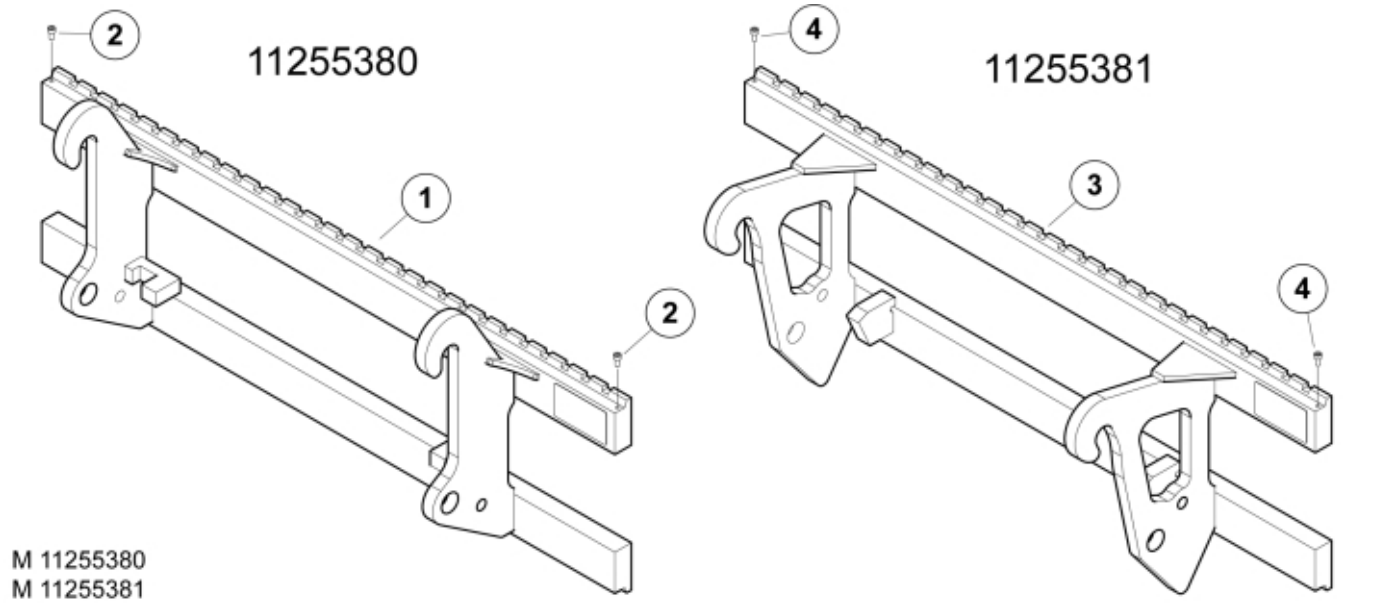

M 11255380
M 11255381

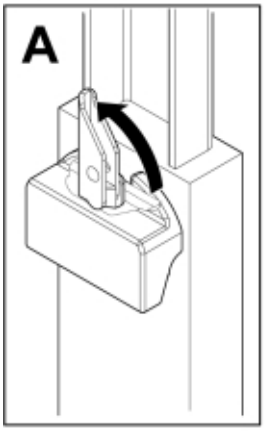

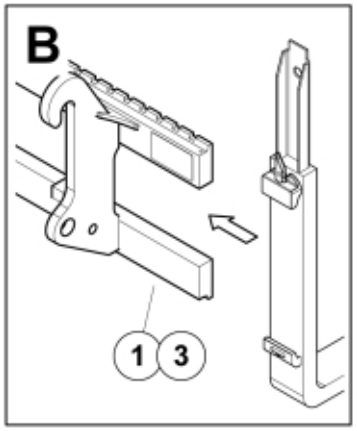

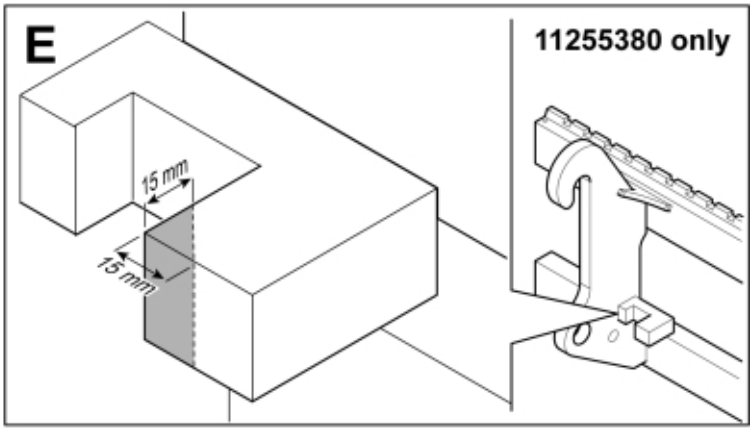

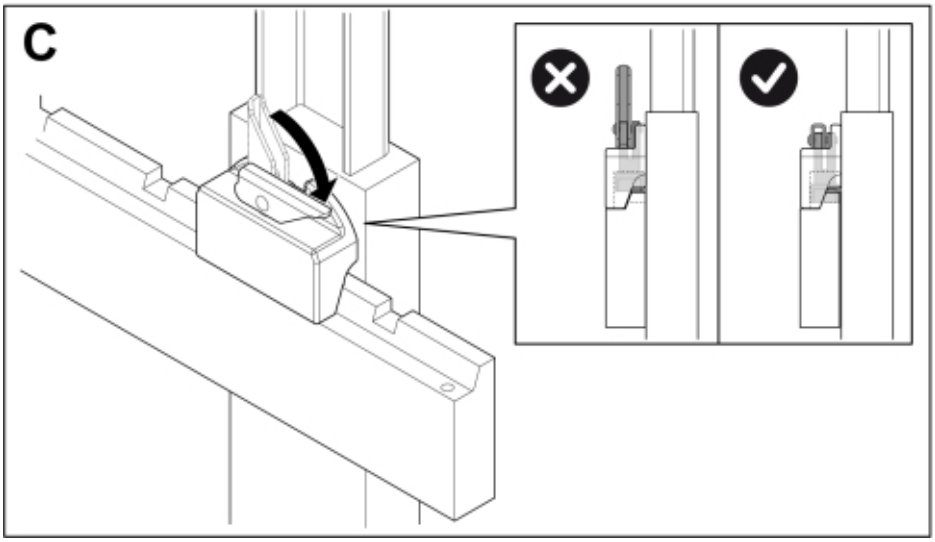

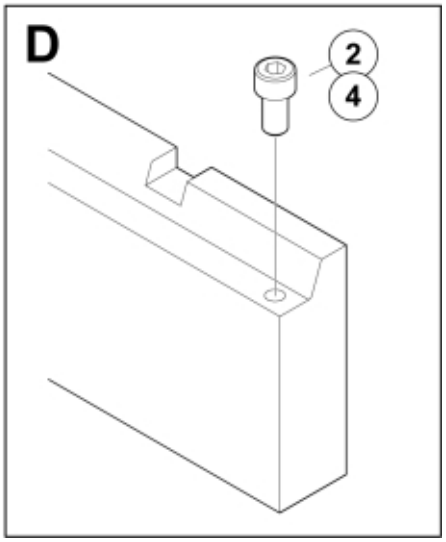

© 2025 Jost

Part assemblies	Pallet fork M - Zettelmeyer 602
Specification	Year From: 1/1/2013 12:00:00 AM

PartNo	Pos	Qty	Name	Specifications
11255380	1	1	Pallet fork M - Zettelmeyer 602	1/1/2013 12:00:00 AM
5004919	2	2	Screw	MC6S M8x16

© 2025 Jost