R 11260637

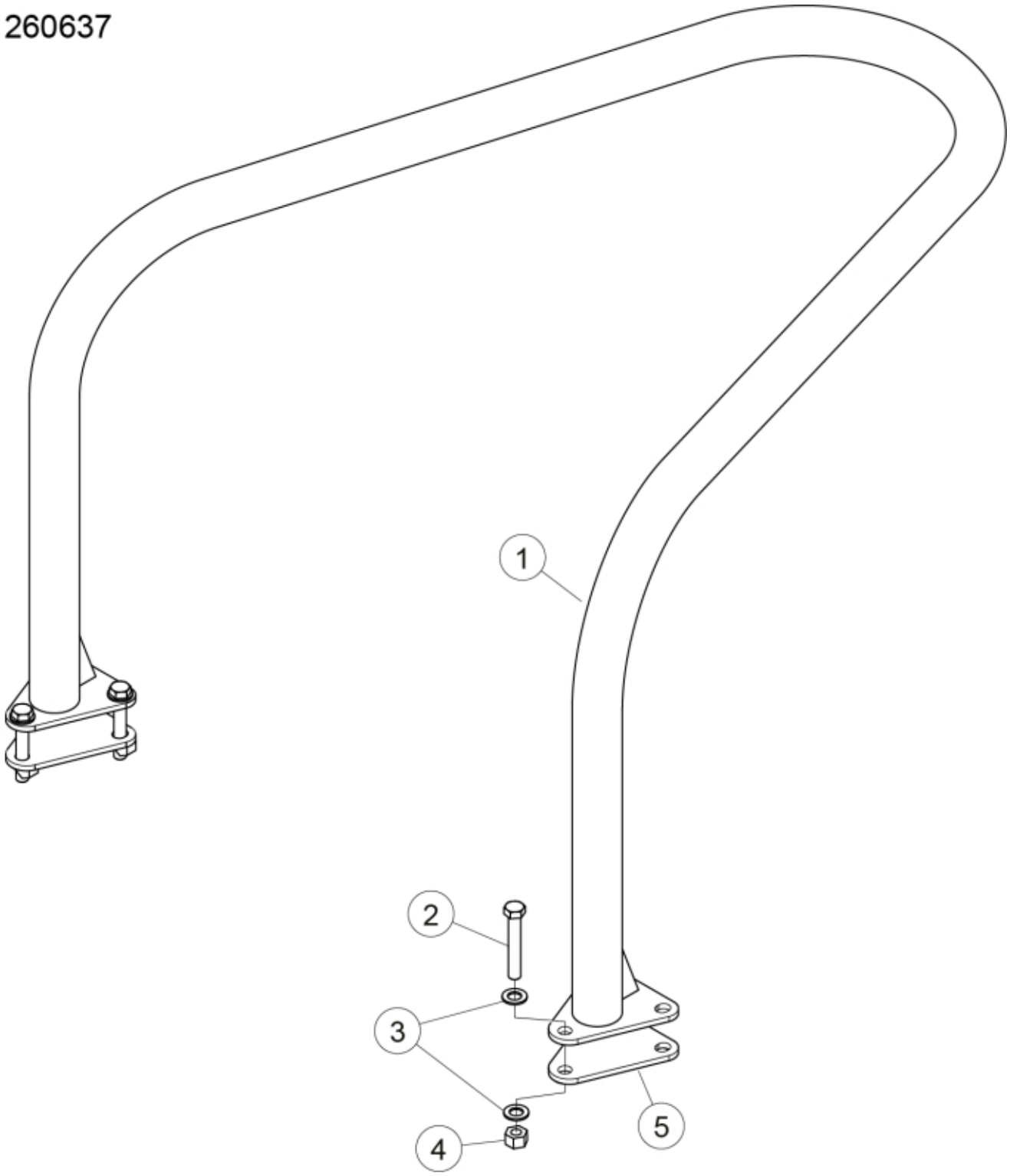

© 2025 Jost

Part assemblies Back stop 200

PartNo	Pos	Qty	Name	Specifications
11260637		1 PCS	Back stop 200	
11260633	1	1 PCS	Protection bar	
5002111	2	6	Screw	M6S M12x80
5013104	3	12	Washer	13.5 x 24 x 2
5011555	4	6	Nut	M12 Loc
11260635	5	2 PCS	Plate	

© 2025 Jost