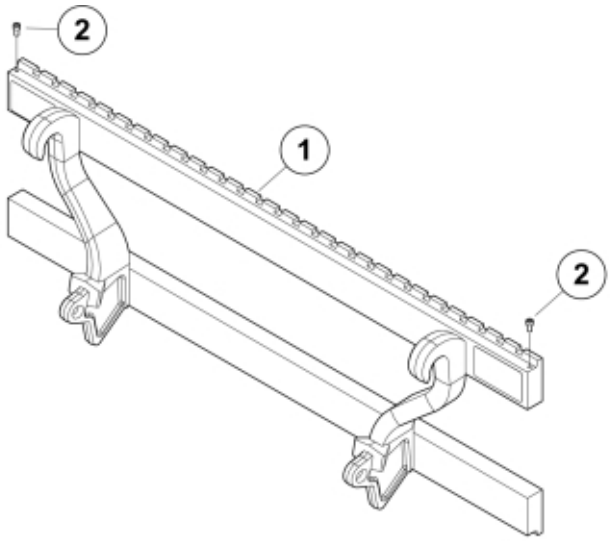

M 11262540

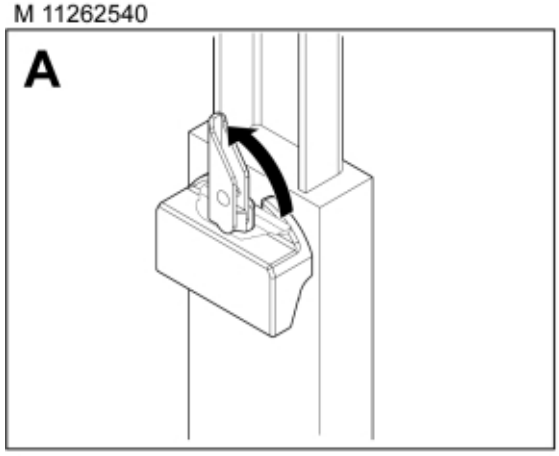

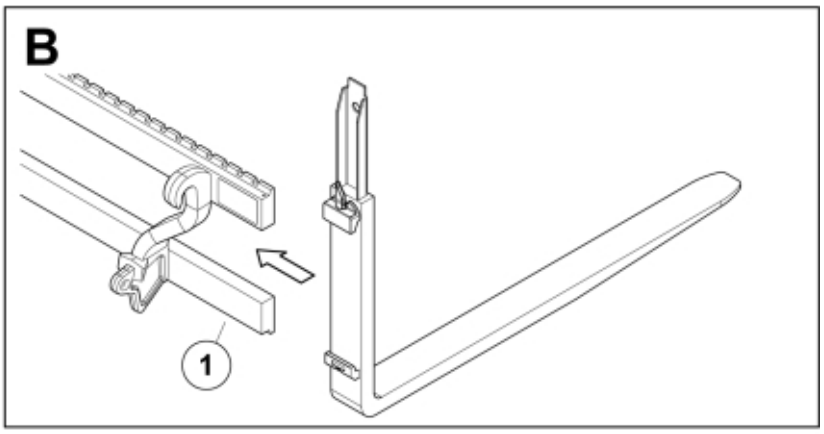

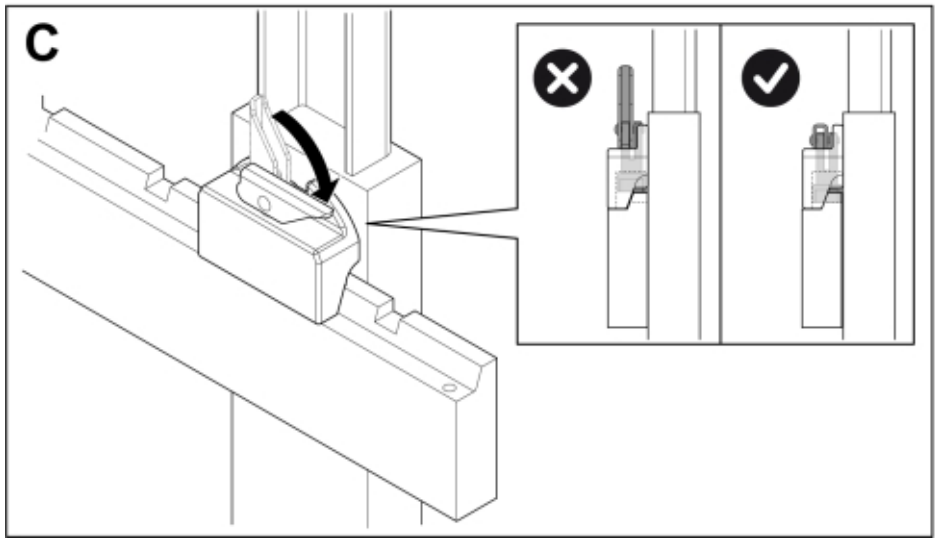

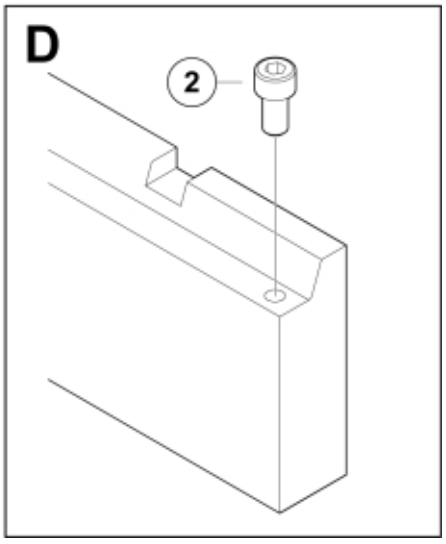

© 2025 Jost

Part assemblies	Pallet fork M - Euro
Specification	Year From: 1/1/2013 12:00:00 AM

PartNo	Pos	Qty	Name	Specifications
11262540	1	1 PCS	Pallet fork M - Euro	
5004919	2	2	Screw	MC6S M8x16

© 2025 Jost