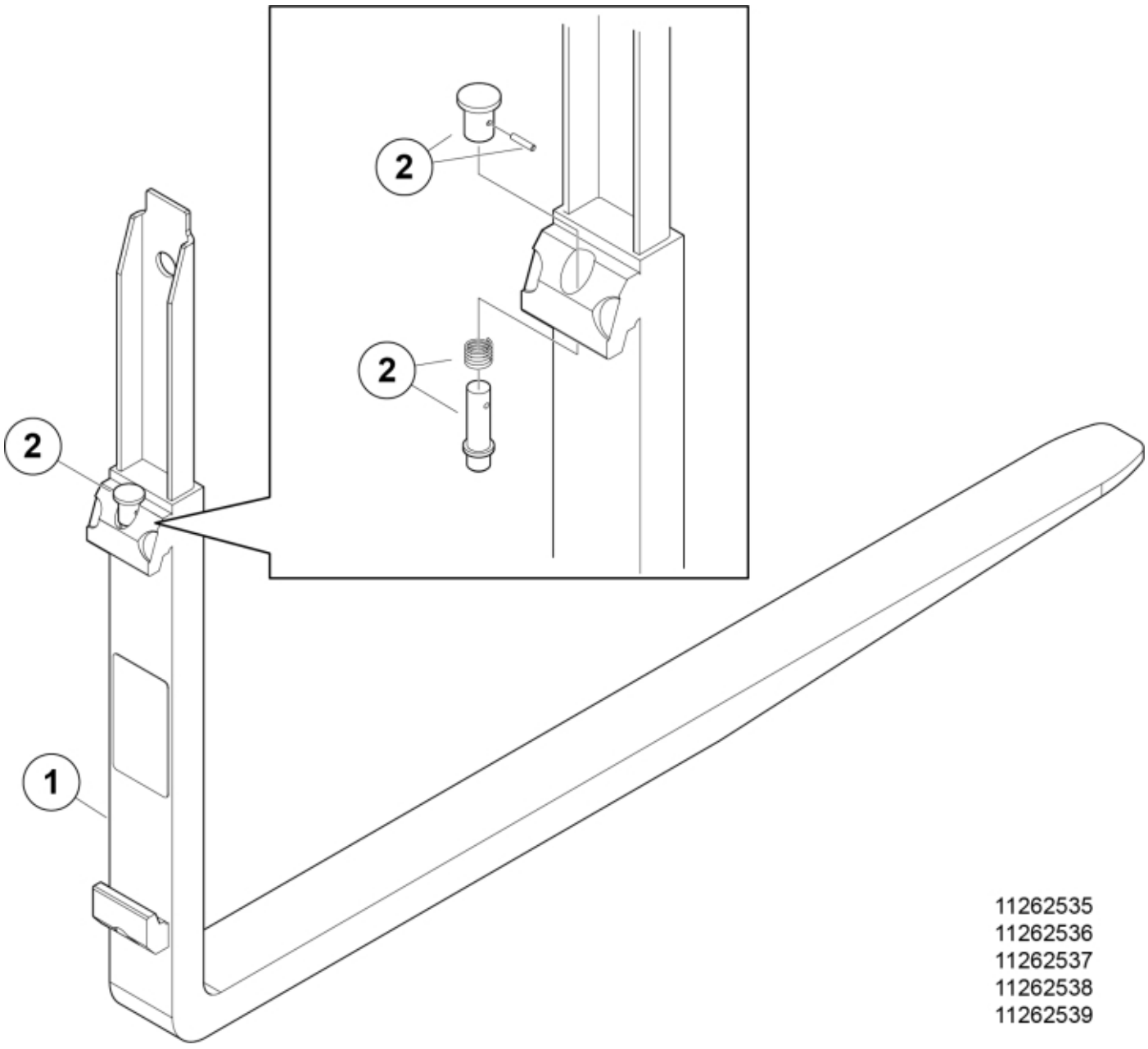

11262535
11262536
11262537
11262538
11262539

© 2025 Jost

Description	L=1220 500kg
Part assemblies	Fork
Specification	Specification: 1220 mm, 500 kg

PartNo	Pos	Qty	Name	Specifications
11262536	1	1 PCS	Fork	1220 mm, 500 kg
11262357	2	1	Locking mechanism	

© 2025 Jost