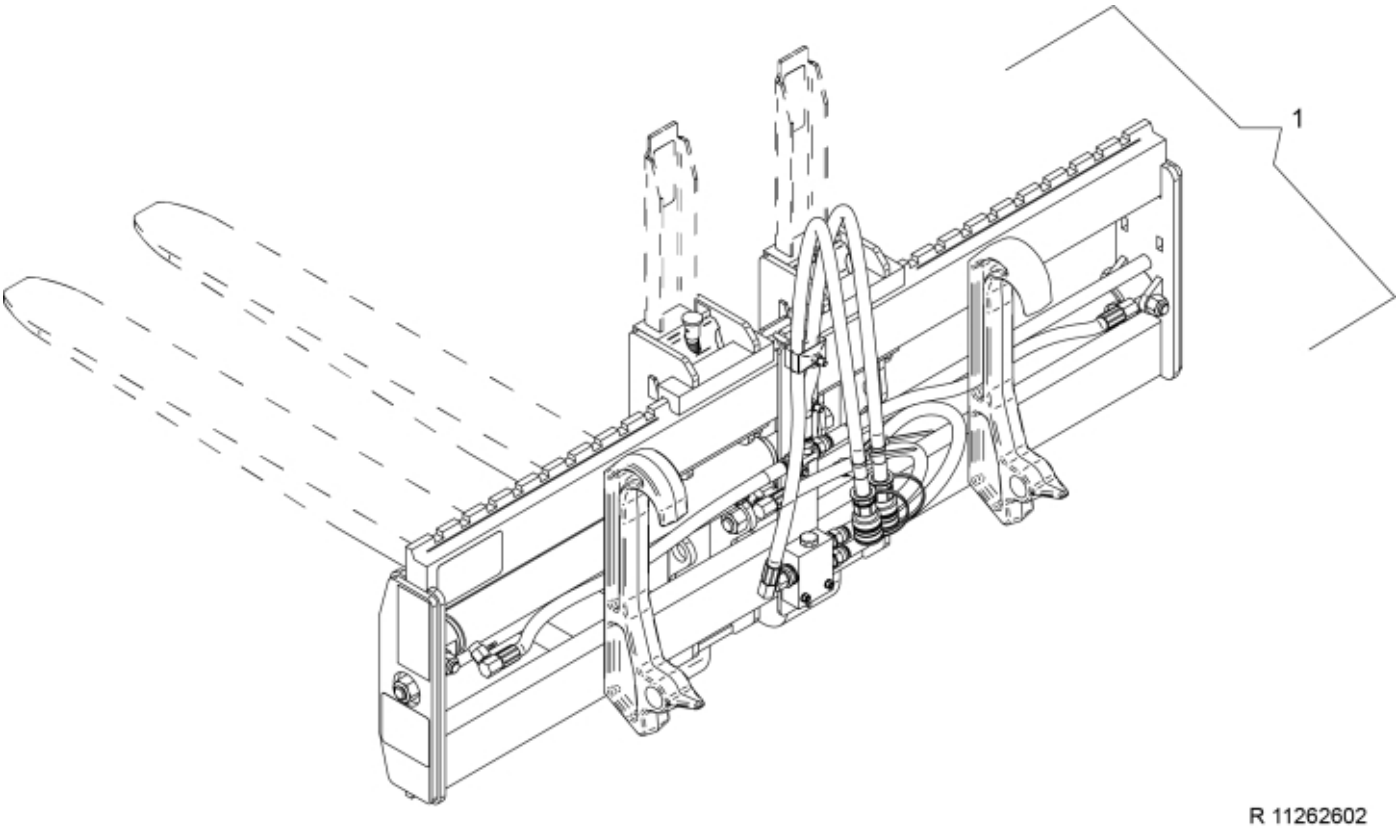

R 11262602

© 2025 Jost

Part assemblies	Hydraulic Pallet fork M - SMS
Specification	Year From: 1/1/2013 12:00:00 AM

PartNo	Pos	Qty	Name	Specifications
11262602		1 PCS	Hydraulic Pallet fork M - SMS	1/1/2013 12:00:00 AM
11252050	1	1 PCS	Hydraulic Pallet Fork	

© 2025 Jost