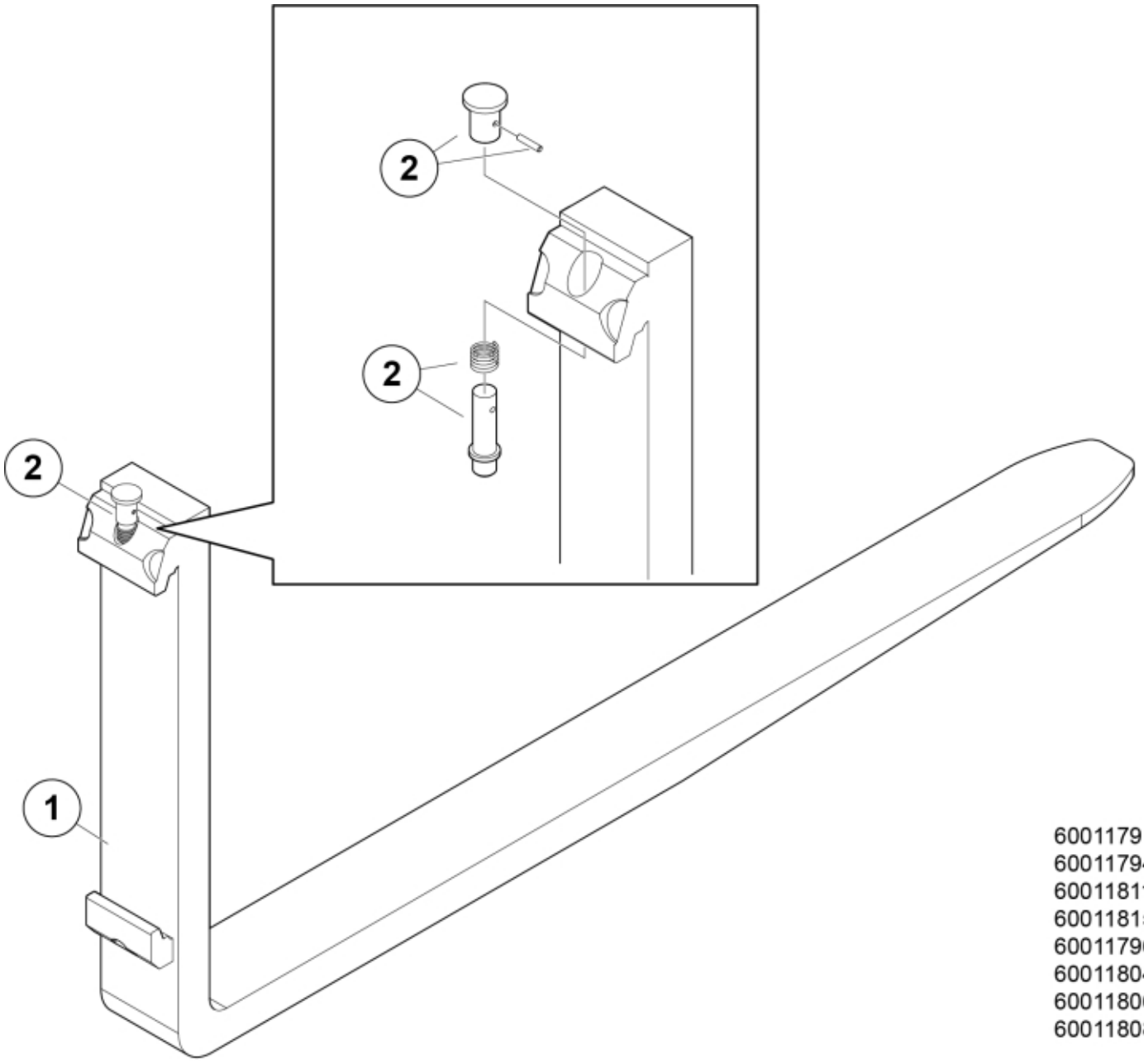

60011791
60011794
60011811
60011815
60011796
60011804
60011806
60011808

© 2025 Jost

Part assemblies Fork

PartNo	Pos	Qty	Name	Specifications
60011794	1	1 PCS	Fork	
11262357	2	1	Locking mechanism	

© 2025 Jost