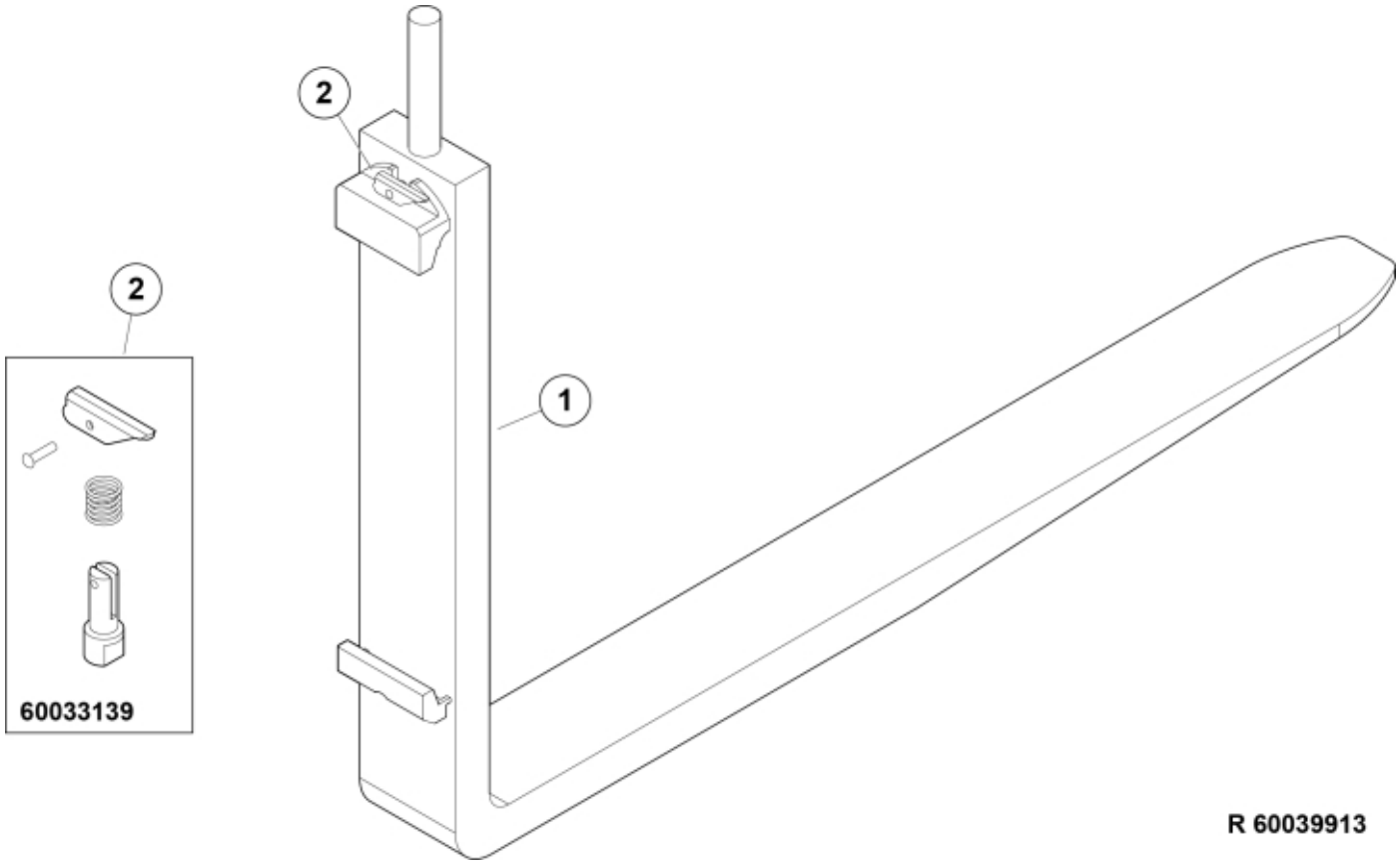

© 2025 Jost

Description	L=1220 3,5t
Part assemblies	Fork

PartNo	Pos	Qty	Name	Specifications
60039913	1	1 PCS	Fork	
60033139	2	1	Locking mechanism	

© 2025 Jost