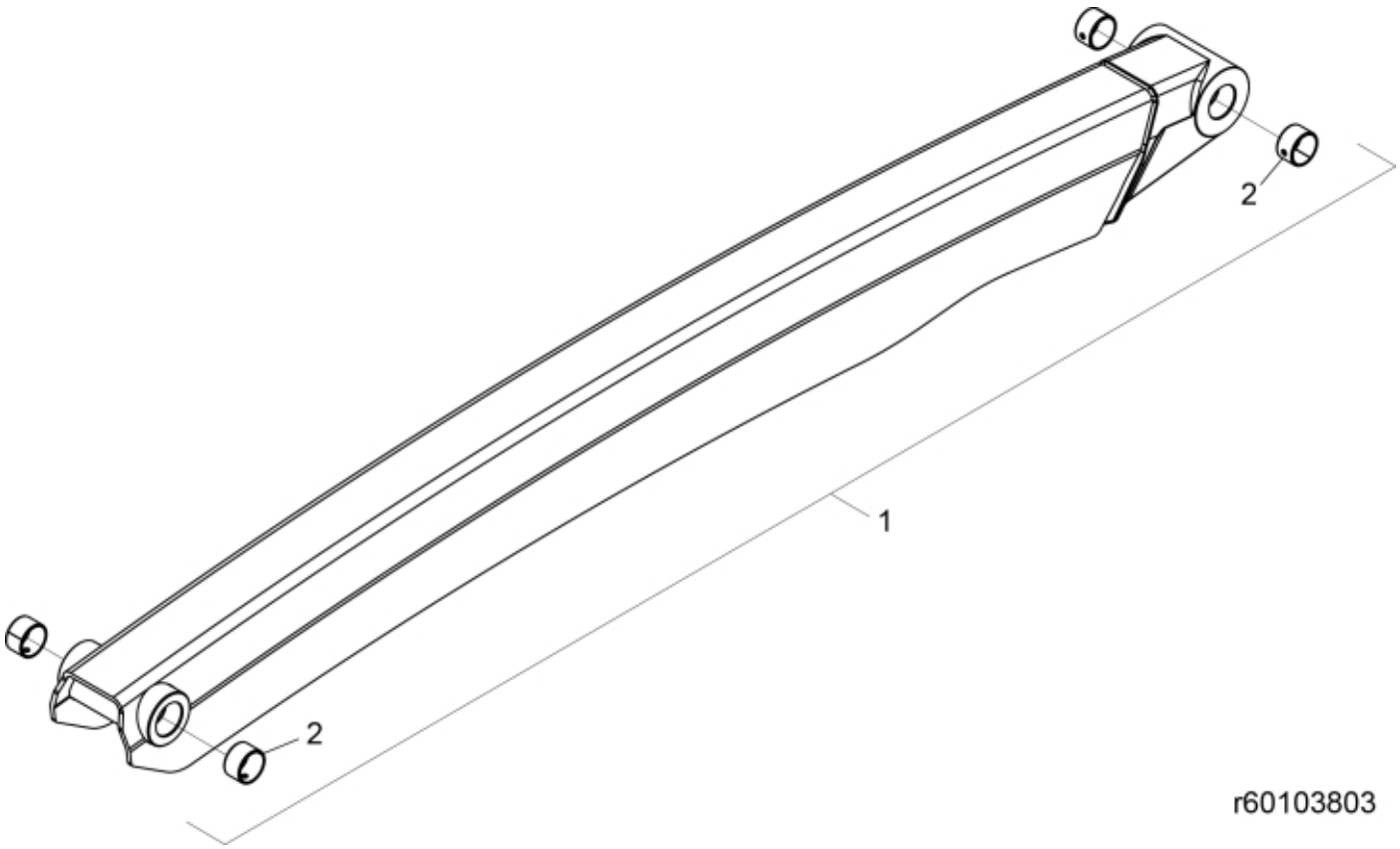

© 2025 Jost

Part assemblies Parallel rod w. bushings

PartNo	Pos	Qty	Name	Specifications
60103807-62	1	1	Parallel rod w. bushings	
5018514	2	4	• Bushing	D35 L=20

© 2025 Jost