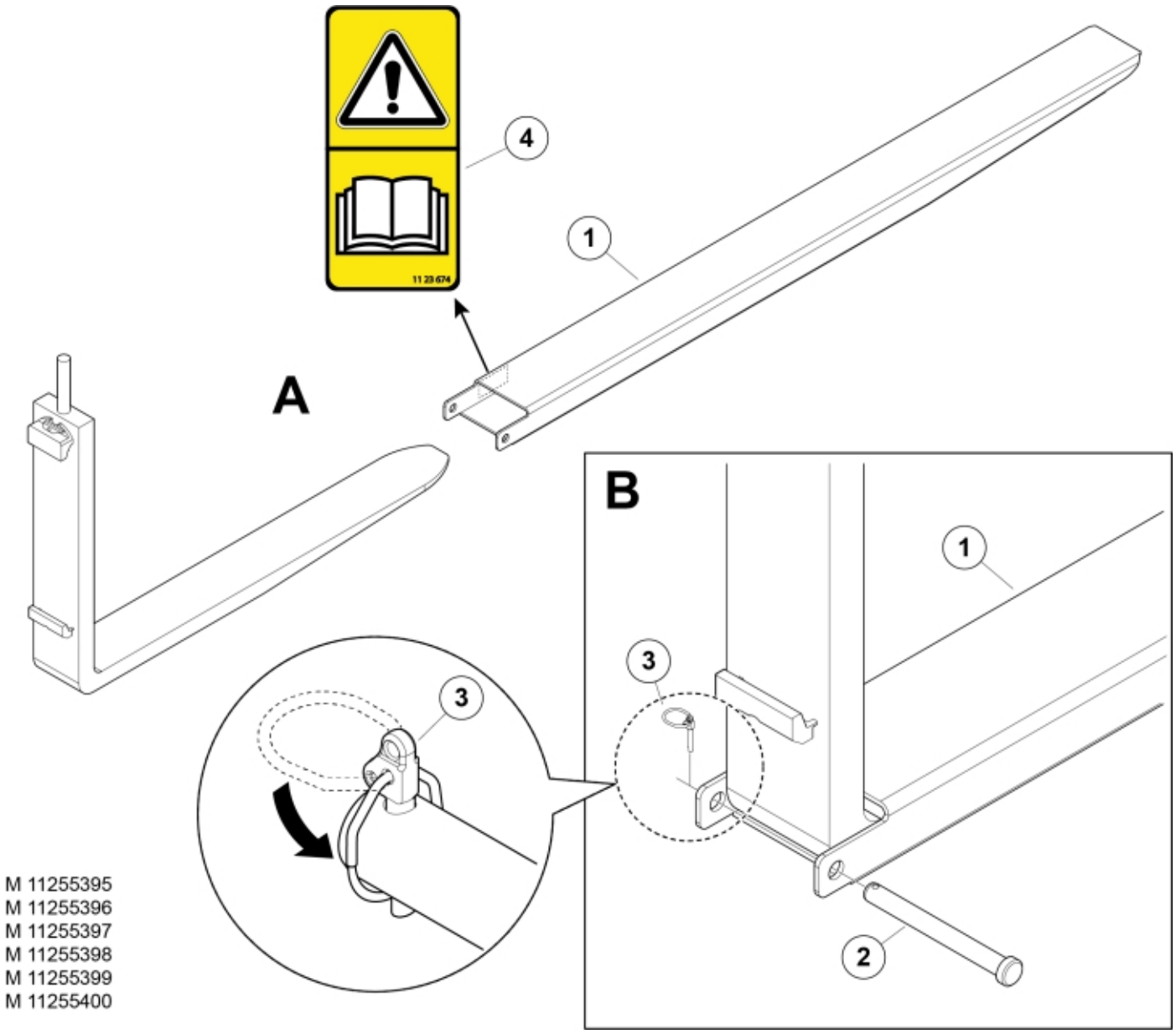


M 11255395
M 11255396
M 11255397
M 11255398
M 11255399
M 11255400


© 2025 Jost

**Part assemblies** Fork extension

| PartNo | Pos | Qty | Name | Specifications |
|---|---|---|---|---|
| 11255396 | | 1 | Fork extension | |
| 60040582 | 1 | 2 PCS | Fork extension | L=2500 3,5t |
| 9020087 | 2 | 2 PCS | Pin | |
| 5016986 | 3 | 2 | Locking Pin | |
| 1123674 | 4 | 2 | Warning decal | "Read manual" |


© 2025 Jost