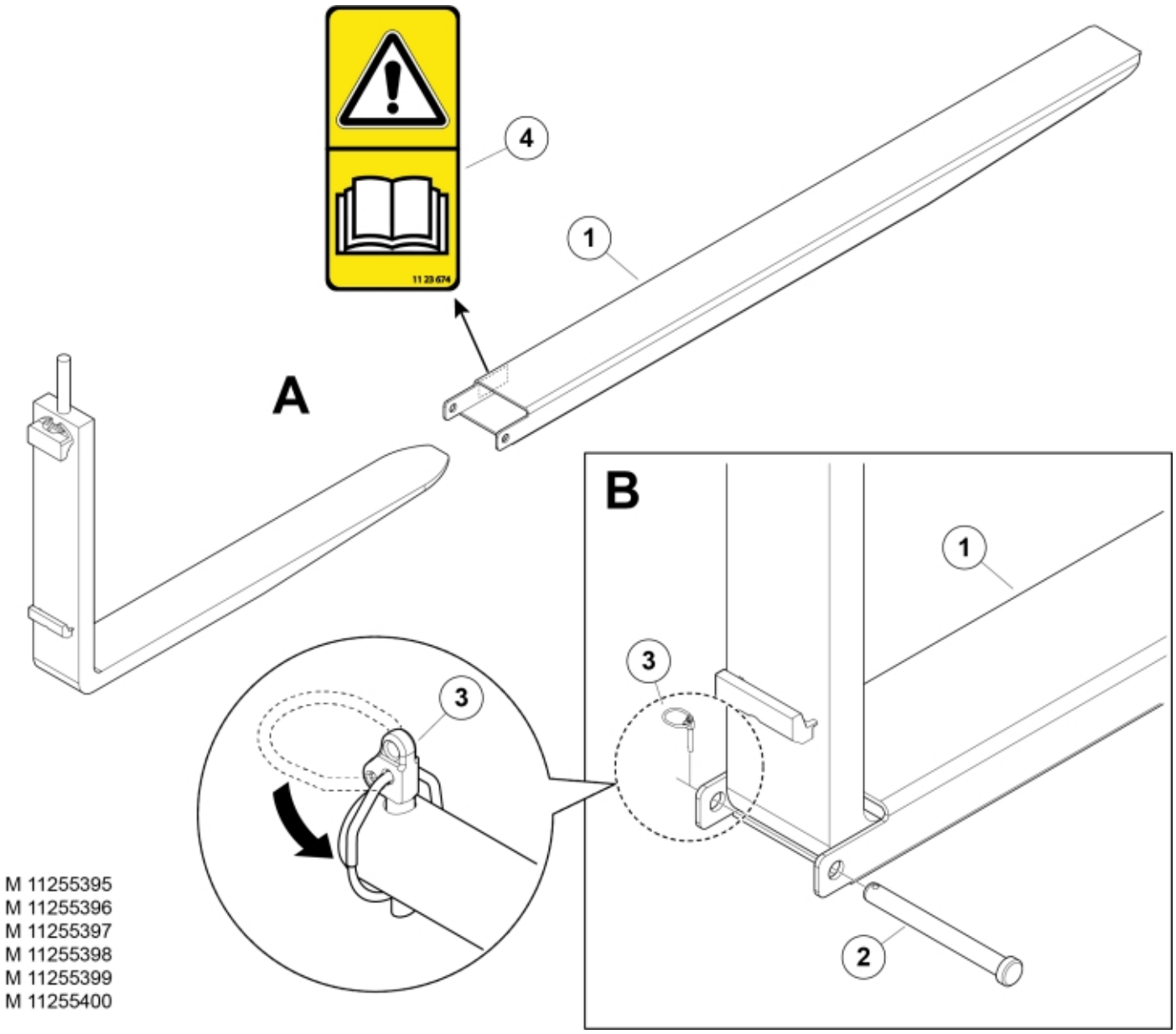

M 11255395
M 11255396
M 11255397
M 11255398
M 11255399
M 11255400

© 2025 Jost

Part assemblies Fork extension

PartNo	Pos	Qty	Name	Specifications
11255397		1	Fork extension	
60040585	1	2 PCS	Fork extension	L=2000 5t
60040656	2	2 PCS	Pin	
5016986	3	2	Locking Pin	
1123674	4	2	Warning decal	"Read manual"

© 2025 Jost