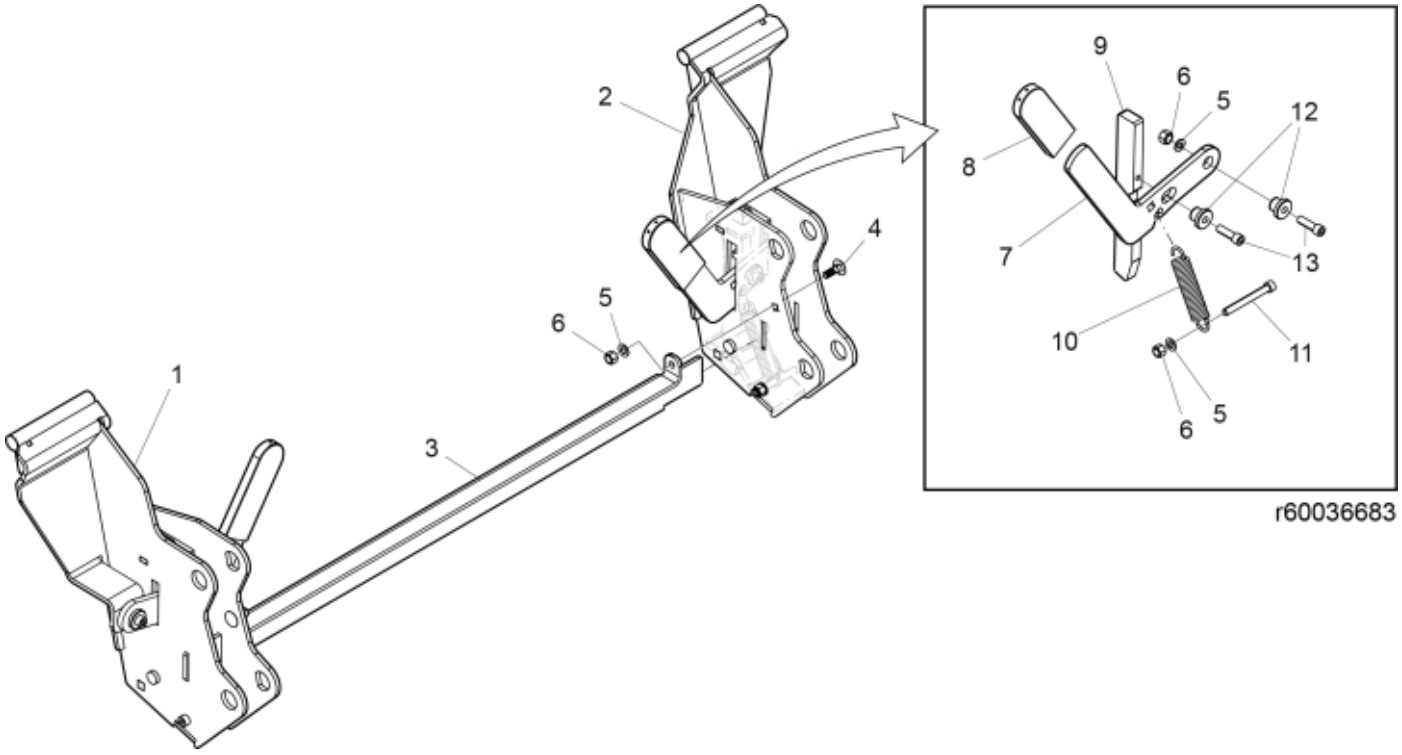

r60036683

© 2025 Jost

Description	Tool carrier
Part assemblies	SkidSteer
Specification	Specification: Glossy Black

PartNo	Pos	Qty	Name	Specifications
60036919-1	1	1 PCS	Bracket LH	Glossy Black
60036920-1	2	1 PCS	Bracket RH	Glossy Black
60036625-1	3	1 PCS	Stay	Glossy Black
5051457	4	2	Screw	M8x25
5013101	5	6	Washer	BRB 8,4 x 16
5011553	6	6	Nut	M6M M8 Loc-king
60036728	7	2	Handle	
5022144	8	2	Cover	
60036716	9	2	Locking plate	
60038083	10	2	Spring	
5004057	11	2	Screw	MC6S M8 x75 (8.8)
60036736	12	4	Sleeve	
5004942	13	4	Screw	MC6S M8 x 35 (8.8)

© 2025 Jost