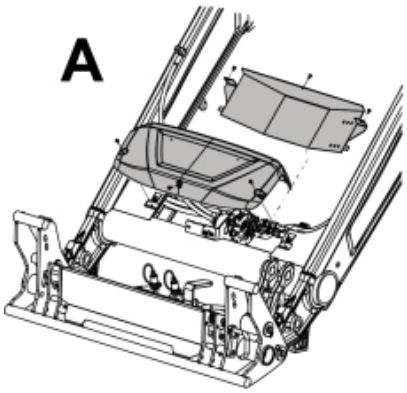

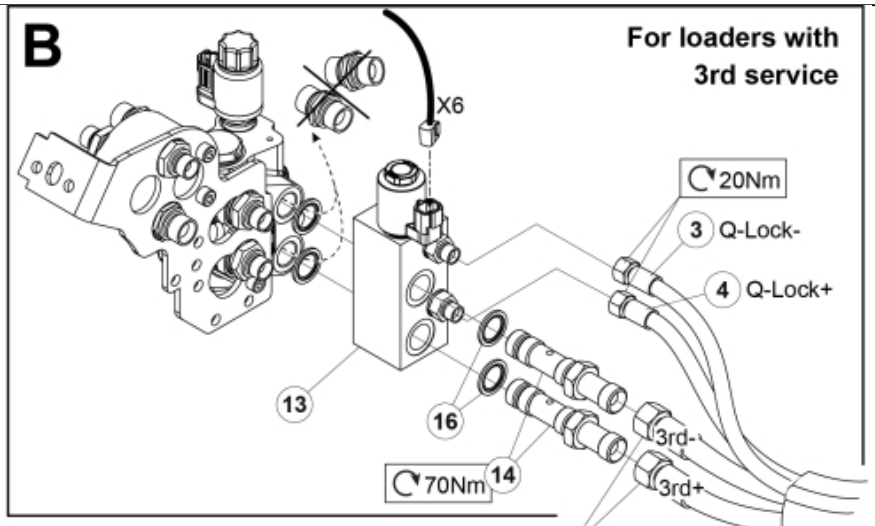

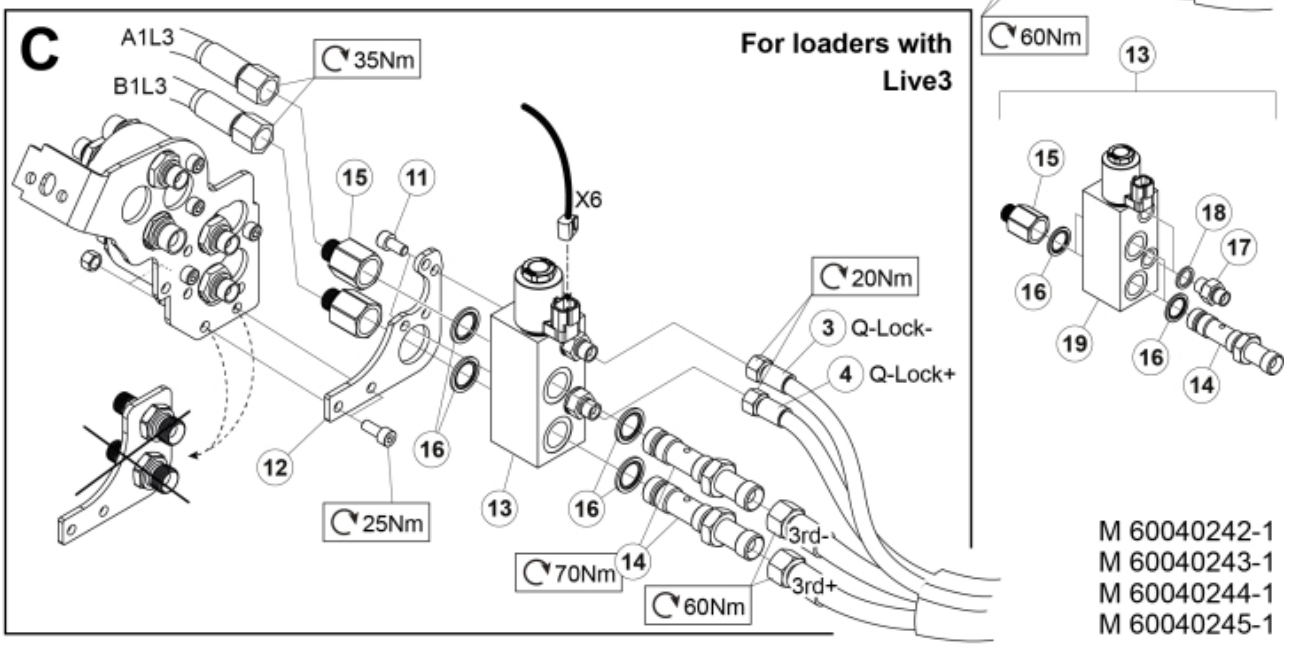

M 60040242-1
M 60040243-1
M 60040244-1
M 60040245-1

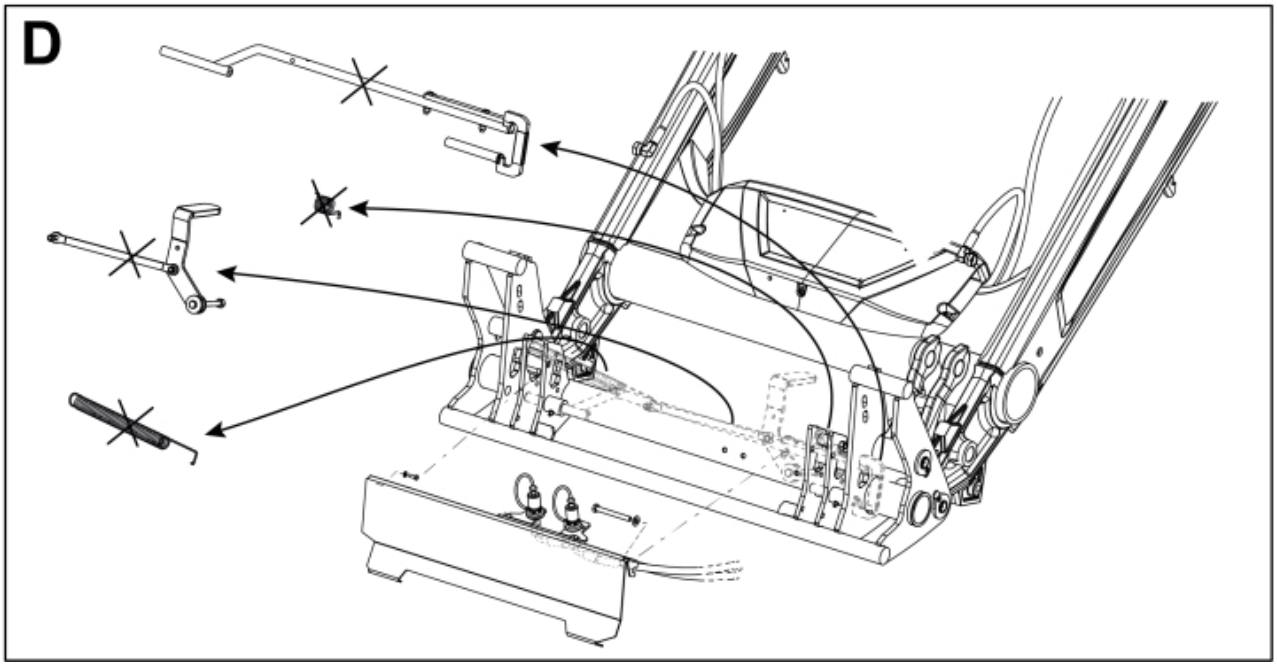

© 2025 Jost

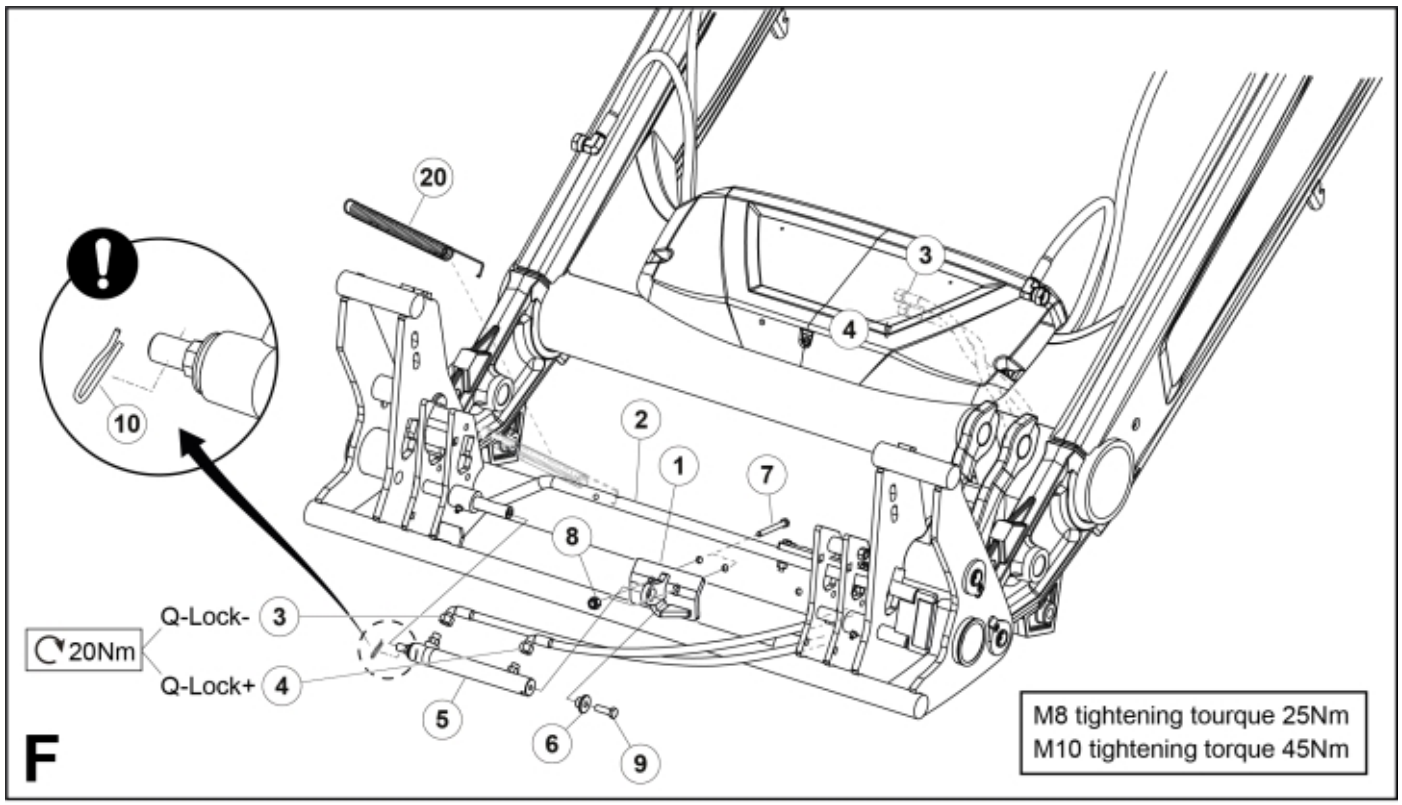

M 60040242-2
M 60040243-2
M 60040244-2
M 60040245-2

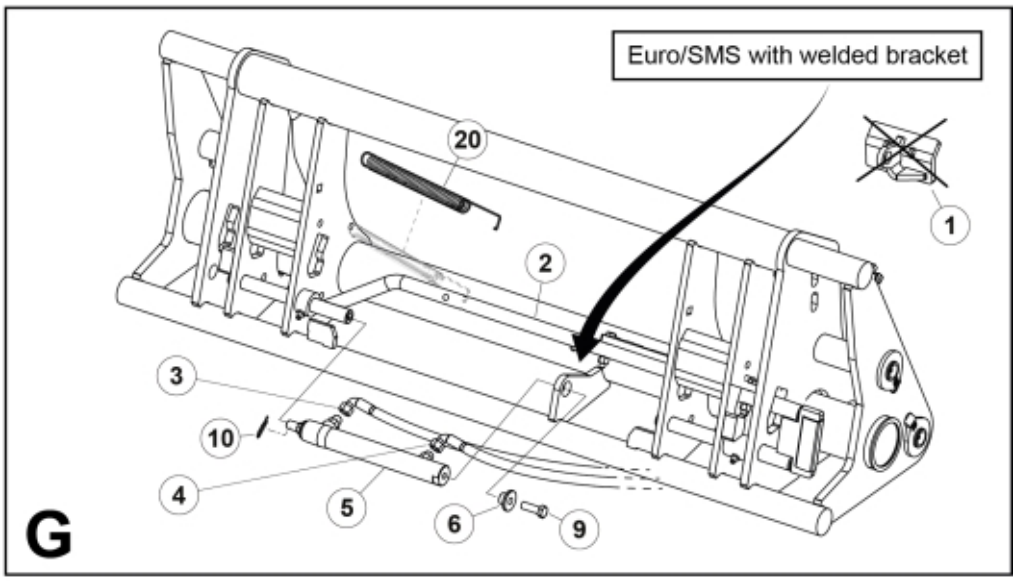

© 2025 Jost

Part assemblies	Q-Lock Euro/SMS DL
Specification	Year From: 2/1/2019 12:00:00 AM

PartNo	Pos	Qty	Name	Specifications
60040245		1 PCS	Q-Lock Euro/SMS DL	2/1/2019 12:00:00 AM Replaces 60019962
60012213	1	1	Attachment	
4501175	2	1	Locking mechanism cpl. (DL Hyd)	Replaces 60013275 and 4501165
60018856	3	1	Hose	1/4" L=1590 1/4G90LM - 1/4GRLM
60018858	4	1	Hose	1/4" L=1430 1/4G90LM - 1/4GRLM
60103722	5	1	Cylinder	
60006448	6	1	Sleeve	
5002081	7	2	Screw	M6S M10 x 110 (8.8)
5011554	8	2	Nut	Loc-King M10
5002971	9	1	Screw	M6S 10x30 Drilock
60020459	10	1	Locking Pin	
5050342	11	2	Screw	MC6S M8x14 (8.8)
60104271	12	1	Bracket	
4501107	13	1	Block cpl	Hydr. Lock, Replaces 4500151, 2/1/2019 12:00:00 AM
60034110	14	2	• Hollow screw	G1/2" Banjo
60104391	15	2	• Adaptor	G1/2" - G3/8"
5013853	16	4	• Dowty washer	Tredo 1/2", Part is included in kit 60007907 Hose cpl., 9032177 Hose cpl.
1120122	17	2	• Adaptor	R 1/4"K - R 1/4"K
5013856	18	2	• Dowty washer	Tredo 1/4"
60037622	19	1	• Valve assy.	Hydraulic lock
60010817	20	1	Spring	

© 2025 Jost