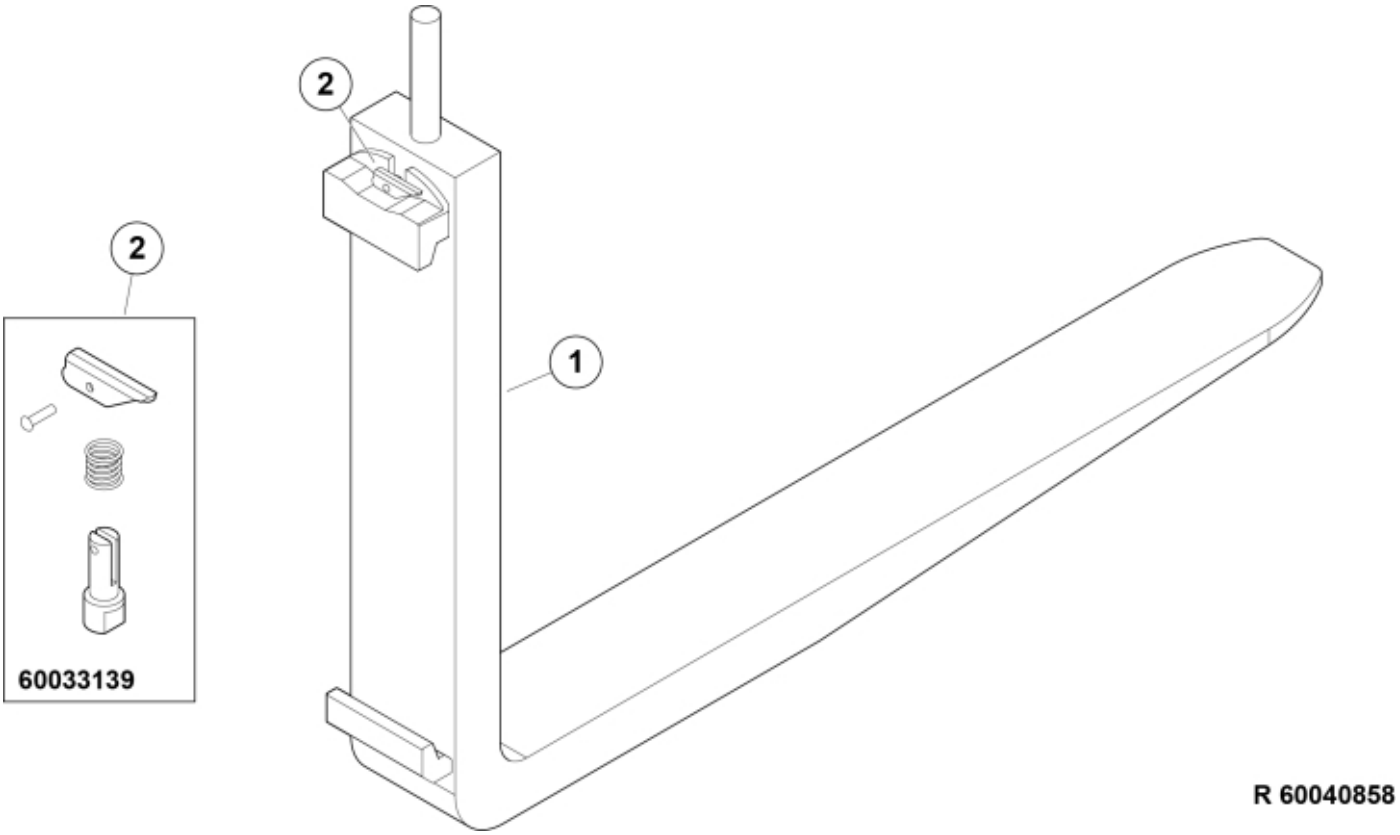

© 2025 Jost

Description	L=1220 8t
Part assemblies	Fork
Specification	Specification: L=1220 8t

PartNo	Pos	Qty	Name	Specifications
60040858	1	1 PCS	Fork	L=1220 8t
60033139	2	1	• Locking mechanism	

© 2025 Jost