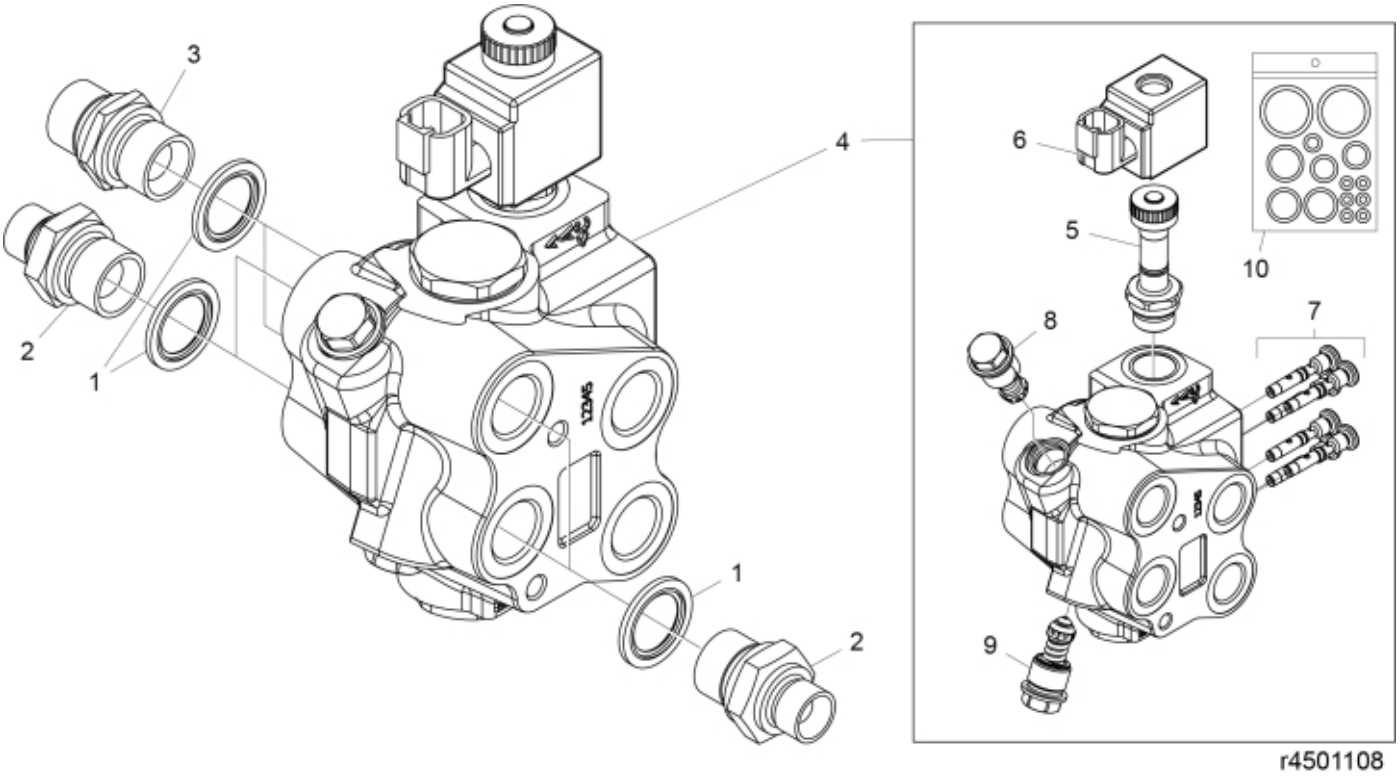

© 2025 Jost

Part assemblies	Block cpl
Specification	Specification: 3rd service
	Specification: Replaces 4500218
	Year From: 3/1/2019 12:00:00 AM

PartNo	Pos	Qty	Name	Specifications
5013853	1	6	Dowty washer	Tredo 1/2", Part is included in kit 60007907 Hose cpl., 9032177 Hose cpl.
1120011	2	4	Adaptor	R1/2"-R3/8"
1120012	3	2	Adaptor	G 1/2"
60063746	4	1	Valve assy.	3rd service
4501096	5	1	• Cartridge valve	
4501097	6	1	• Coil	
4501101	7	1	• Check valve	
4501098	8	1	• Relief valve cpl.	220 bar
60063492	9	1	• Relief valve cpl.	250 bar
4501104	10	1	• Seal kit	

© 2025 Jost