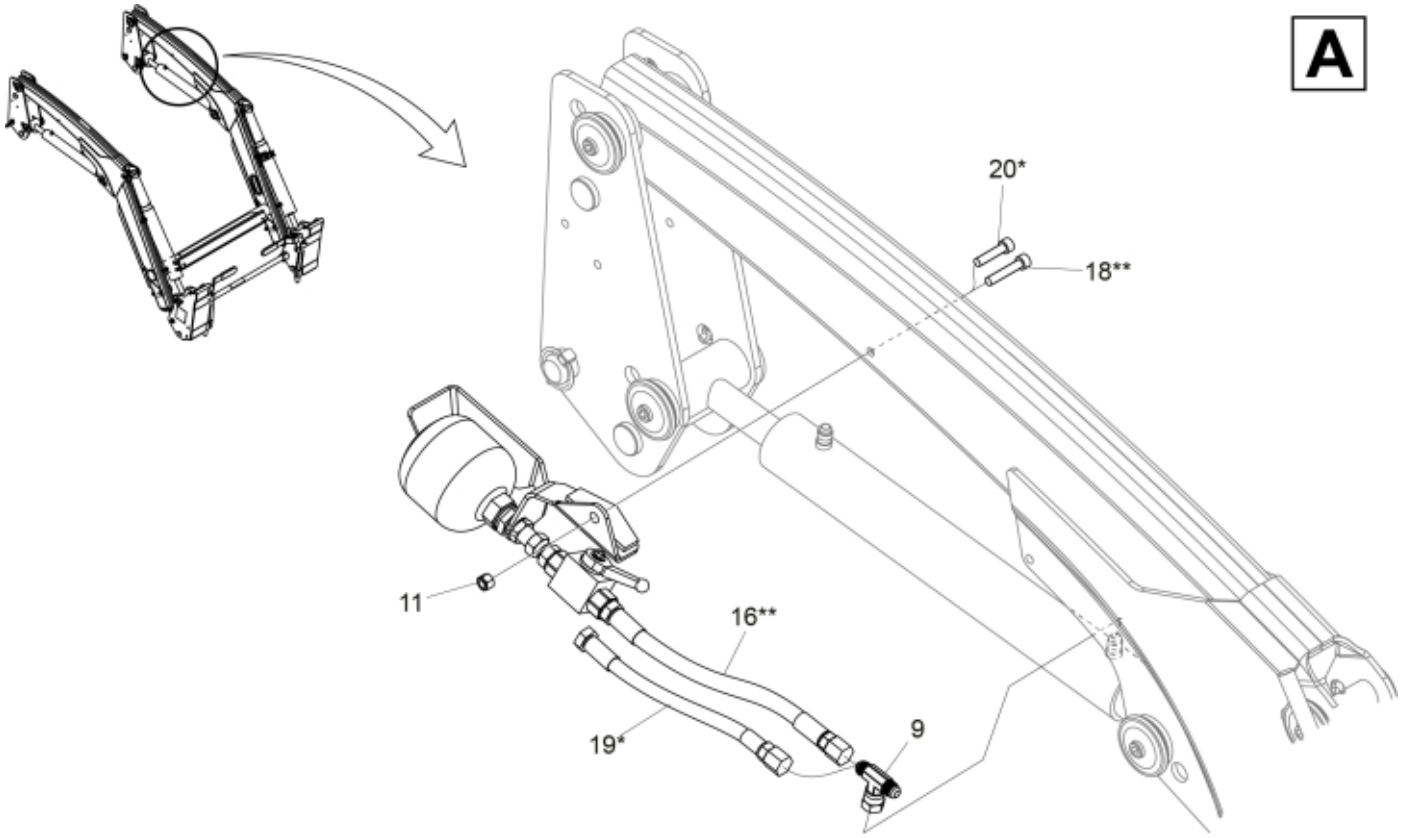

M 60031776

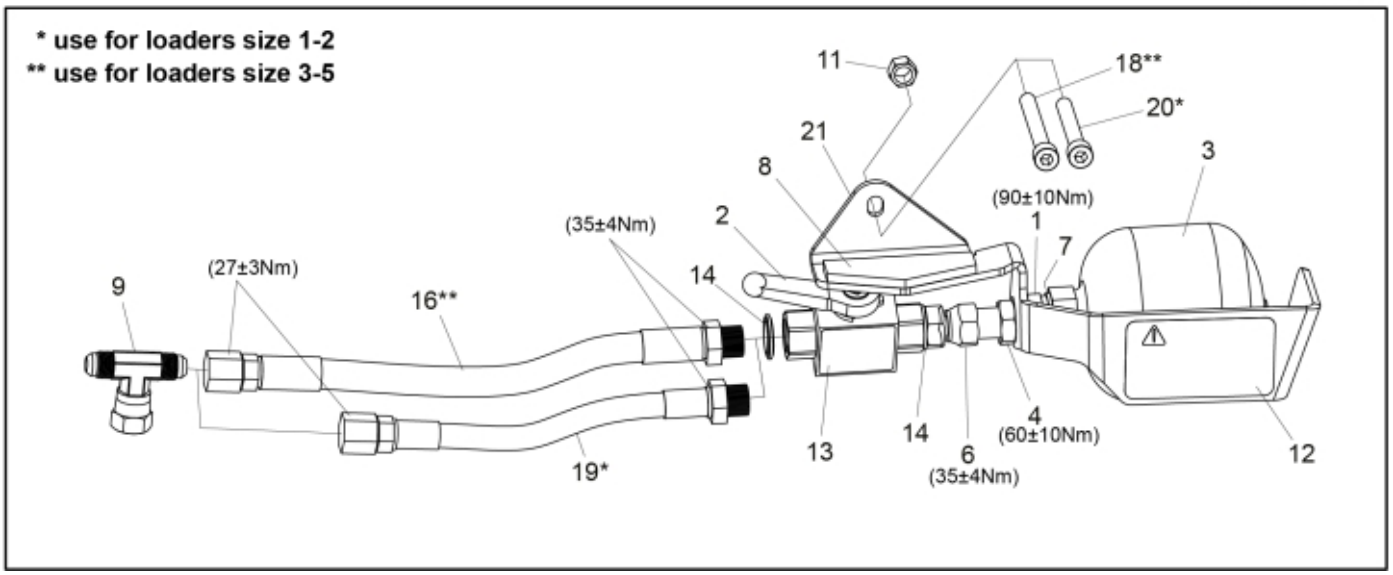

© 2025 Jost

Part assemblies SoftDrive kit

PartNo	Pos	Qty	Name	Specifications
60031776		1	SoftDrive kit	
1120158	1	1	Adaptor	R 1/2” - R 3/8”
513005	2	1	Shut-off valve	R3/8"
5045024	3	1	Accumulator	
5011756	4	1	Nut	3/8"
1120081	6	1	Adaptor	3/8" BSP
5013853	7	1	Dowty washer	Tredo 1/2", Part is included in kit 60007907 Hose cpl., 9032177 Hose cpl.
5221968	8	1	Rubber foam	
5028105	9	1	Adaptor	
5011553	11	1	Nut	M6M M8 Loc-king
60042636	12	1	Decal	
11136531	13	1	Decal	
5013852	14	2	Dowty washer	Tredo 3/8"
60077010	16	1	Hose	3/8" L=290 9/16RLM - 3/8GRU
5004057	18	1	Screw	MC6S M8 x75 (8.8)
60077009	19	1	Hose	1/4" L=220 9/16RLM - 3/8GRU
5004056	20	1	Screw	M8x65
60031691	21	1	Bracket	

© 2025 Jost